TC Series Pump | Submittal Data

Submittal No: 301-1826 | **Model:** 080512 | **RPM:** 1160 - 60 Hz | **Effective:** 08/01/24 | **Supersedes:** 04/25/19

JOB: _____ **REPRESENTATIVE:** _____

ENGINEER: _____ **CONTRACTOR:** _____

PRODUCT DATA

ITEM NO. _____ **MODEL NO.** 080512

IMPELLER DIAMETER _____ **HORSEPOWER** _____

GPM _____ **VOLTAGE** _____

HEAD/FT _____ **RPM** 1160

WEIGHT _____ **PUMP/MOTOR** _____

OPERATING SPECIFICATIONS

	FLANGE	PRESSURE	TEMPERATURE
STANDARD	ANSI Class 125	175 PSIG* (1210 KPA)	250°F (120°C)
OPTIONAL	ANSI Class 250	300 PSIG** (2070 KPA)	250°F (120°C)

* In accordance with ANSI Standard B16.1 Class 125
** In accordance with ANSI Standard B16.1 Class 250 Dim.

DIMENSIONS

Model No. | 080512 - **Flange Size (Suction x Discharge) |** 8 x 5 (203 x 127)

MOTOR & FRAME DIMENSIONS				
HP		10	15	20
MOTOR FRAME ODP	**460 VOLT ***	256T	284T	286T
	2300/ 4160 VOLT	N/A		
MOTOR FRAME TEFC	**460 VOLT ***	256T	284T	286T
	2300/ 4160 VOLT	N/A		
MAX. ASSEMBLY WEIGHT LBS (KG)		2084 (946)	2249 (1021)	
A (MAX. VALUE)**		24.80 (630)	27.68 (703)	
J		6 X 1.1 (6 X 28)		
K		7.28 (185)		
L1		59.06 (1500)	61.42 (1560)	
L2		21.65 (550)	22.83 (580)	
L3				
L4		N/A		
M		24.02 (610)		
N		26.38 (670)		
P		32.68 (830)		

PUMP DIMENSIONS			
HP	10	15	20
B1 Suction	ANSI Class 125: 1.10 (28)		
	ANSI Class 250: 1.61 (41)		
B2 Discharge	ANSI Class 125: 0.94 (24)		
	ANSI Class 250: 1.38 (35)		
C	7.87 (200)		
D	7.87 (200)		
E	20.39 (518)		
F	15.87 (403)		
G	37.60 (955)		
H	23.03 (585)		
R	0.35 (9)		

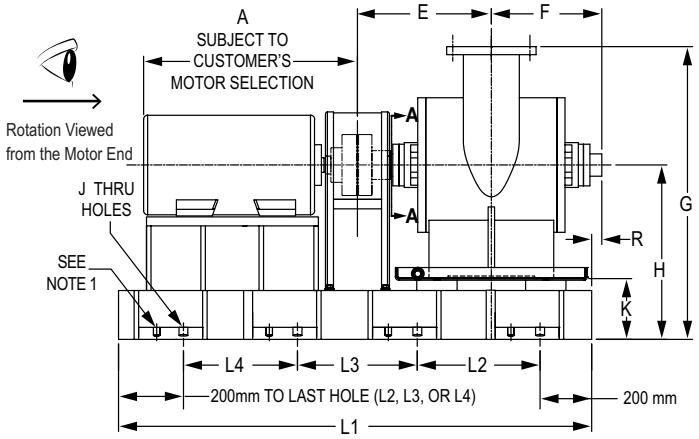

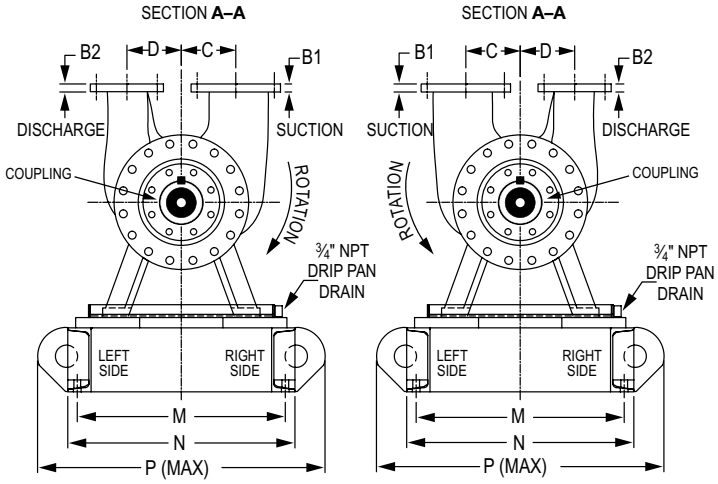

Clockwise Rotation Viewed from the Motor End (motor not shown)

Counterclockwise Rotation Viewed from the Motor End (motor not shown)

For all customer supplied motors above 449 NEMA frame, a certified motor drawing must be supplied by the customer at time of order entry.

Submittal dimensions for motor frames above 449 NEMA are specific to Baldor Electric Motors only.

English dimensions are in inches. Metric dimensions are in millimeters. Metric data is presented in ( ).

Dimensions are subject to change without notice. Do not use for construction purposes unless certified.

* Standard voltage is 230/460 for motors up to 100HP.

NOTE 1: Additional set of smaller holes are for alignment. Dimensions not supplied.

** Motor dimensions are approximate and vary by manufacturer and motor type.

MATERIALS OF CONSTRUCTION	CASING	IMPELLER	WEAR RING	SHAFT	SHAFT SLEEVE	MECHANICAL SEAL	SEAL FLUSH LINE
STANDARD	Cast Iron ASTM A48 Class 30A	Stainless Steel AISI 304	Stainless Steel AISI 420	Carbon Steel AISI 1045	Stainless Steel AISI 420	Carbon/Silicon Carbide Viton	N/A
OPTIONAL	N/A	N/A	N/A	Stainless Steel AISI 420	N/A	N/A	Copper

N/A - Not Available

Model 080512	**1160 RPM**	**Curve no. 2521**
		Min. Imp. Dia. 9.40"
TC/TS Series	**August 1, 2024**	**Size 8 X 5 X 12**

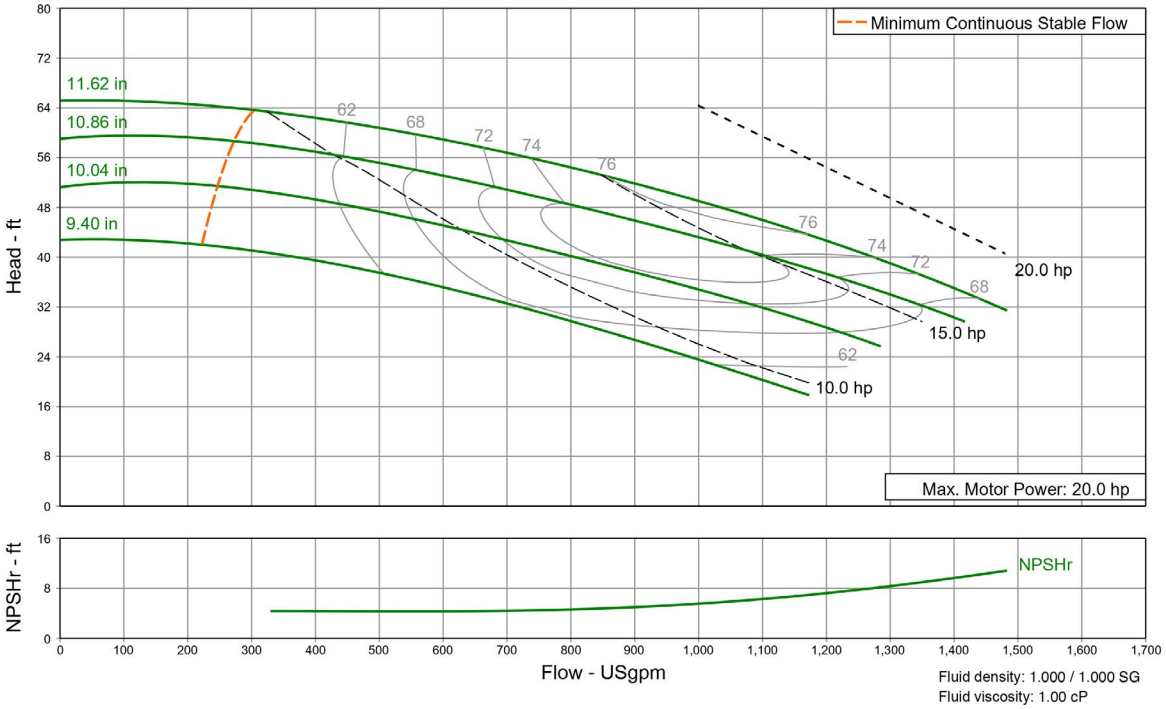

COMMENTS