Altivar 12

Variable speed drives for asynchronous motors

User manual

04/2009

BBV28581

www.schneider-electric.com

Schneider Electric

Contents

Important information 4
Before you begin 5
Documentation structure 7
Steps for setting up (also refer to Quick Start) 8
Setup - Preliminary recommendations 9
Drive ratings 10
Dimensions and weights 11
Mounting 12
Wiring 15
Power terminals 19
Control terminals 22
Check list 28
Factory configuration 29
Basic functions 30
Programming 31
Structure of parameter tables 34
Function compatibility table 35
Reference Mode rEF 36
Monitoring mode MOn 37
Configuration Mode ConF 43
Configuration Mode - MyMenu 44
Configuration Mode - Complete menu (FULL) 46
Maintenance 85
Migration ATV11 - ATV12 86
Diagnostics and Troubleshooting 93
Application notes 99
Recommended branch circuit protection 105
Organization tree 106
Parameter index 107

Energy savings
Speed control process regulating enables significant energy savings, particulary with pump and fan applications. Furthermore some ATV12 functions enable to henance these savings: Motor control type CtE page 55, Sleep/wake tLS page 72 and PID regulation PIF page 70.

Important information

NOTICE

Read these instructions carefully, and look at the equipment to become familiar with the device before trying to install, operate, or maintain it. The following special messages may appear throughout this documentation or on the equipment to warn of potential hazards or to call attention to information that clarifies or simplifies a procedure.

The addition of this symbol to a Danger or Warning safety label indicates that an electrical hazard exists, which will result in personal injury if the instructions are not followed.

This is the safety alert symbol. It is used to alert you to potential personal injury hazards. Obey all safety messages that follow this symbol to avoid possible injury or death.

⚠ DANGER

DANGER indicates an imminently hazardous situation, which, if not avoided, **will result** in death or serious injury.

⚠ WARNING

WARNING indicates a potentially hazardous situation, which, if not avoided, **can result** in death, serious injury or equipment damage.

⚠ CAUTION

CAUTION indicates a potentially hazardous situation, which, if not avoided, **can result** in injury or equipment damage.

CAUTION

CAUTION, used without the safety alert symbol, indicates a potentially hazardous situation which, if not avoided, **can result** in equipment damage.

PLEASE NOTE

The word "drive" as used in this manual refers to the controller portion of the adjustable speed drive as defined by NEC.

Electrical equipment should be installed, operated, serviced, and maintained only by qualified personnel. No responsibility is assumed by Schneider Electric for any consequences arising out of the use of this product.

© 2009 Schneider Electric. All Rights Reserved.

Before you begin

Read and understand these instructions before performing any procedure with this drive.

⚠ ⚠ DANGER

HAZARD OF ELECTRIC SHOCK, EXPLOSION, OR ARC FLASH

- Read and understand this manual before installing or operating the Altivar 12 drive. Installation, adjustment, repair, and maintenance must be performed by qualified personnel.
- The user is responsible for compliance with all international and national electrical code requirements with respect to grounding of all equipment.
- Many parts of this drive, including the printed circuit boards, operate at the line voltage. DO NOT TOUCH. Use only electrically insulated tools.
- DO NOT touch unshielded components or terminal strip screw connections with voltage present.
- DO NOT short across terminals PA/+ and PC/– or across the DC bus capacitors.
- Before servicing the drive:
  - Disconnect all power, including external control power that may be present.
  - Place a “DO NOT TURN ON” label on all power disconnects.
  - Lock all power disconnects in the open position.
  - WAIT 15 MINUTES to allow the DC bus capacitors to discharge. Then follow the “Bus Voltage Measurement Procedure”, page 13 to verify that the DC voltage is less than 42 V. The drive LEDs are not indicators of the absence of DC bus voltage.
- Install and close all covers before applying power or starting and stopping the drive.

Failure to follow these instructions will result in death or serious injury.

⚠ DANGER

UNINTENDED EQUIPMENT OPERATION

- Read and understand this manual before installing or operating the Altivar 12 drive.
- Any changes made to the parameter settings must be performed by qualified personnel.

Failure to follow these instructions will result in death or serious injury.

⚠ WARNING

DAMAGED DRIVE EQUIPMENT

Do not operate or install any drive or drive accessory that appears damaged.

Failure to follow these instructions can result in death, serious injury, or equipment damage.

⚠ WARNING

LOSS OF CONTROL

- The designer of any control scheme must
  - consider the potential failure modes of control paths and, for certain critical control functions,
  - provide a means to achieve a safe state during and after a path failure.

Examples of critical control functions are emergency stop and overtravel stop.

- Separate or redundant control paths must be provided for critical control functions.
- System control paths may include communication links. Consideration must be given to the implications of unanticipated transmission delays or failures of the link.[a]

Failure to follow these instructions can result in death, serious injury, or equipment damage.

a. For additional information, refer to NEMA ICS 1.1 (latest edition), “Safety Guidelines for the Application, Installation, and Maintenance of Solid State Control” and to NEMA ICS 7.1 (latest edition), “Safety Standards for Construction and Guide for Selection, Installation and Operation of Adjustable-Speed Drive Systems.”

⚠ CAUTION

INCOMPATIBLE LINE VOLTAGE

Before turning on and configuring the drive, ensure that the line voltage is compatible with the supply voltage range shown on the drive nameplate. The drive may be damaged if the line voltage is not compatible.

Failure to follow these instructions can result in injury or equipment damage.

Using motors in parallel

Set Motor control type Ctt page 55 to Std.

CAUTION

RISK OF DAMAGE TO THE MOTOR

Motor thermal protection is no longer provided by the drive. Provide an alternative means of thermal protection on every motor

Failure to follow these instructions can result in equipment damage

Documentation structure

The following Altivar 12 technical documents are available on the Schneider Electric website (www.schneider-electric.com) as well as on DVD-ROM (reference VW3A8200).

User manual

This manual describes how to install, commission, operate and program the drive.

Simplified manual

This manual is a simplified version of the user manual. It is delivered with the drive.

Quick Start

The Quick Start describes how to wire and configure the drive to start motor quickly and simply for simple applications. This document is delivered with the drive.

Modbus Communication manual

This manual describes the assembly, connection to the bus or network, signaling, diagnostics, and configuration of the communication-specific parameters via the 7-segment LED display.
It also describes the communication services of the Modbus protocol.
This manual includes all Modbus addresses. It explains the operating mode specific to communication (state chart).

ATV12P manual

This manual describes the specific features of ATV12P drives.

1. Receive and inspect the drive

- ☐ Check that the part number printed on the label is the same as that on the purchase order.
- ☐ Remove the Altivar from its packaging and check that it has not been damaged in transit.

2. Check the line voltage

- ☐ Check that the line voltage is compatible with the voltage range of the drive (page 10).

3. Mount the drive

- ☐ Mount the drive in accordance with the instructions in this document (page 12).
- ☐ Install any options required.

Steps **2** to **4** must be performed with the **power off**.

4. Wire the drive (page 19)

- ☐ Connect the motor, ensuring that its connections correspond to the voltage.
- ☐ Connect the line supply, after making sure that the power is off.
- ☐ Connect the control part.

5. Configure the drive (page 31)

- ☐ Apply input power to the drive but do not give a run command.
- ☐ Set the motor parameters (in Conf mode) only if the factory configuration of the drive is not suitable.
- ☐ Perform auto-tuning.

6. Start

Prior to switching on the drive

⚠ DANGER

UNINTENDED EQUIPMENT OPERATION

Ensure that all logic inputs are inactive to help prevent an accidental startup.

Failure to follow these instructions will result in death or serious injury.

Prior to configuring the drive

⚠ DANGER

UNINTENDED EQUIPMENT OPERATION

- Read and understand this manual before installing or operating the Altivar 12 drive.
- Any changes made to the parameter settings must be performed by qualified personnel.
- Ensure that all logic inputs are inactive to help prevent an accidental startup when modifying parameters.

Failure to follow these instructions will result in death or serious injury.

Using the drive with motor having a different size

The motor could have different rating than drive. In case of smaller motor, there is no specific calculation. The motor current has to be set on Motor thermal current ItH parameter page 80. In case of higher size of motor, possible up to 2 sizes (example is using a 4 kW (5.5 HP) on a 2.2 kW (3 HP) drive) it is necessary to ensure motor current and actual motor power will not pass over nominal power of drive.

Line contactor

CAUTION

RISK OF DAMAGE TO THE DRIVE

- Avoid operating the contactor frequently to avoid premature aging of the filter capacitors.
- Power cycling must be MORE than 60 seconds.

Failure to follow these instructions can result in equipment damage.

Use with a smaller rated motor or without a motor

- In factory settings mode, Output Phase loss OPL page 80 is active (OPL set to YES). To check the drive in a test or maintenance environment without having to switch to a motor with the same rating as the drive (particularly useful in the case of high power drives), deactivate Output Phase loss OPL (OPL set to nO).
- Set Motor control type Ctt page 55 to Std in Motor control menu drC-.

CAUTION

RISK OF DAMAGE TO THE MOTOR

Motor thermal protection will not be provided by the drive if the motor rating current is less than 20% of the rated drive current. Provide an alternative means of thermal protection.

Failure to follow these instructions can result in equipment damage.

Drive ratings

Single-phase supply voltage: 100…120 V 50/60 Hz

For three Phase Output 200/240 V motors

Motor		Line supply (input)				Drive (output)			Reference (2)	Size (3)
Power indicated on plate (1)		Maximum line current		Apparent power	Power dissipated at nominal current (1)	Nominal current In	Max. transient current for			
		at 100 V	at 120 V				60 s	2 s		
kW	HP	A	A	kVA	W	A	A	A		
0.18	0.25	6	5	1	18	1.4	2.1	2.3	ATV12H018F1	1C1
0.37	0.5	11.4	9.3	1.9	29	2.4	3.6	4	ATV12H037F1	1C1
0.75	1	18.9	15.7	3.3	48	4.2	6.3	6.9	ATV12H075F1	2C1

Single-phase supply voltage: 200…240 V 50/60 Hz

For three Phase Output 200/240 V motors

Motor		Line supply (input)				Drive (output)			Reference (2)	Size (3)
Power indicated on plate (1)		Maximum line current		Apparent power	Power dissipated at nominal current (1)	Nominal current In	Max. transient current for			
		at 200 V	at 240 V				60 s	2 s		
kW	HP	A	A	kVA	W	A	A	A		
0.18	0.25	3.4	2.8	1.2	18	1.4	2.1	2.3	ATV12H018M2	1C2
0.37	0.5	5.9	4.9	2	27	2.4	3.6	4	ATV12H037M2	1C2
0.55	0.75	8	6.7	2.8	34	3.5	5.3	5.8	ATV12H055M2	1C2
0.75	1	10.2	8.5	3.5	44	4.2	6.3	6.9	ATV12H075M2	1C2
1.5	2	17.8	14.9	6.2	72	7.5	11.2	12.4	ATV12HU15M2	2C2
2.2	3	24	20.2	8.4	93	10	15	16.5	ATV12HU22M2	2C2

Three-phase supply voltage: 200…240 V 50/60 Hz

For three Phase Output 200/240 V motors

Motor		Line supply (input)				Drive (output)			Reference (2)	Size (3)
Power indicated on plate (1)		Maximum line current		Apparent power	Power dissipated at nominal current (1)	Nominal current In	Max. transient current for			
		at 200 V	at 240 V				60 s	2 s		
kW	HP	A	A	kVA	W	A	A	A		
0.18	0.25	2	1.7	0.7	16	1.4	2.1	2.3	ATV12H018M3	1C3
0.37	0.5	3.6	3	1.2	24	2.4	3.6	4	ATV12H037M3	1C3
0.75	1	6.3	5.3	2.2	41	4.2	6.3	6.9	ATV12H075M3	1C3
1.5	2	11.1	9.3	3.9	73	7.5	11.2	12.4	ATV12HU15M3	2F3
2.2	3	14.9	12.5	5.2	85	10	15	16.5	ATV12HU22M3	2F3
3	4	19	15.9	6.6	94	12.2	18.3	20.1	ATV12HU30M3	3F3
4	5.5	23.8	19.9	8.3	128	16.7	25	27.6	ATV12HU40M3	3F3

(1) These power ratings are for a switching frequency of 4 kHz, in continuous operation. The switching frequency is adjustable from 2 to 16 kHz.
Above 4 kHz, the drive will reduce the switching frequency if an excessive temperature rise occurs. The temperature rise is detected by a probe in the power module. Nonetheless, derating should be applied to the nominal drive current if continuous operation above 4 kHz is required:
- 10% derating for 8 kHz
- 20% derating for 12 kHz
- 30% derating for 16 kHz

(2) **Reference description**,
example: ATV12HU15M3
ATV12: Altivar 12;
H: product on heatsink;
U15: drive power rating,
see nCU parameter page 40;
M3: drive voltage rating,
see UCAL parameter page 40.

(3) **Size description**

	2			F			3	
possible values	1	physical size 1	possible values	F	Flat	possible values	1	100 V 1 phase
	2	physical size 2		C	Compact		2	200 V 1 phase
	3	physical size 3					3	200 V 3 phase

Dimensions and weights

ATV12H018F1, 018M2, 037F1, 037M2, 037M3, 018M2, 018M3, 055M2, 075M2

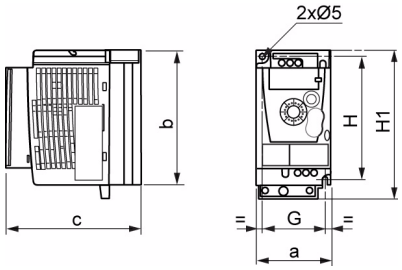

ATV12H	a mm (in.)	b mm (in.)	c mm (in.)	G mm (in.)	H mm (in.)	H1 mm (in.)	Ø mm (in.)	For screws	Weight kg (lb)
018F1 018M2 018M3	72 (2.83)	142 (5.59)	102.2 (4.02)	60 (2.36)	131 (5.16)	143 (5.63)	2 x 5 (2 x 0.20)	M4	0.7 (1.5)
037F1 037M2 037M3	72 (2.83)	130 (5.12)	121.2 (4.77)	60 (2.36)	120 (4.72)	143 (5.63)	2 x 5 (2 x 0.20)	M4	0.8 (1.8)
055M2 075M2 075M3	72 (2.83)	130 (5.12)	131.2 (5.17)	60 (2.36)	120 (4.72)	143 (5.63)	2 x 5 (2 x 0.20)	M4	0.8 (1.8)

ATV12H075F1, U15M2, U22M2, U15M3, U22M3

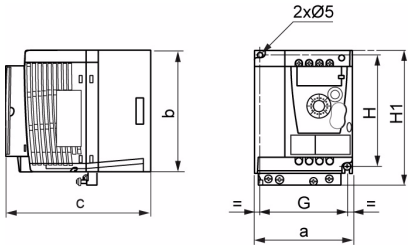

ATV12H	a mm (in.)	b mm (in.)	c mm (in.)	G mm (in.)	H mm (in.)	H1 mm (in.)	Ø mm (in.)	For screws	Weight kg (lb)
075F1	105 (4.13)	130 (5.12)	156.2 (6.15)	93 (3.66)	120 (4.72)	142 (5.59)	2 x 5 (2 x 0.20)	M4	1.3 (2.9)
U15M2 U22M2	105 (4.13)	130 (5.12)	156.2 (6.15)	93 (3.66)	120 (4.72)	142 (5.59)	2 x 5 (2 x 0.20)	M4	1.4 (3.1)
U15M3 U22M3	105 (4.13)	130 (5.12)	131.2 (5.17)	93 (3.66)	120 (4.72)	143 (5.63)	2 x 5 (2 x 0.20)	M4	1.2 (2.6)

ATV12HU30M3, U40M3

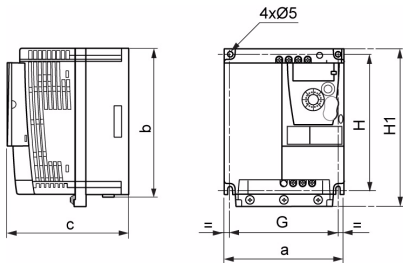

ATV12H	a mm (in.)	b mm (in.)	c mm (in.)	G mm (in.)	H mm (in.)	H1 mm (in.)	Ø mm (in.)	For screws	Weight kg (lb)
U30M3 U40M3	140 (5.51)	170 (6.69)	141.2 (5.56)	126 (4.96)	159 (6.26)	184 (7.24)	4 x 5 (2 x 0.20)	M4	2.0 (4.4)

Mounting

Mounting and temperature conditions

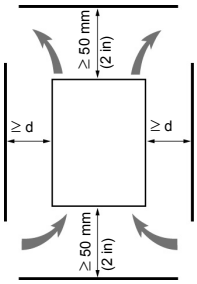

Install the unit vertically, at ± 10°.
Do not place it close to heating elements.
Leave sufficient free space to ensure that the air required for cooling purposes can circulate from the bottom to the top of the unit.

Free space in front of unit: 10 mm (0.4 in.) minimum.

When IP20 protection is adequate, we recommend that the vent cover(s) on the top of the drive be removed, as shown below.

We recommend that the drive is installed on a dissipative surface.

Removing the vent cover(s)

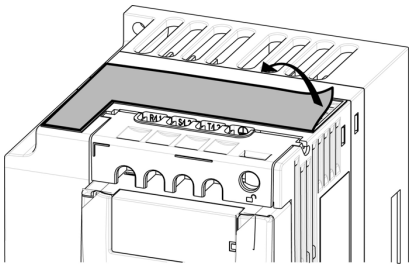

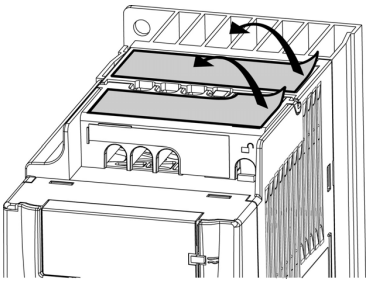

Mounting types

Type A mounting

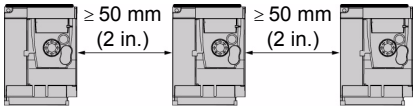

Free space ≥ 50 mm (2 in.) on each side, with vent cover fitted. Mounting type A is suitable for drive operation at surrounding air temperature less than or equal to 50°C (122°F).

Type B mounting

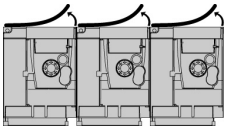

Drives mounted side-by-side, vent cover should be removed (the degree of protection becomes IP20).

Type C mounting

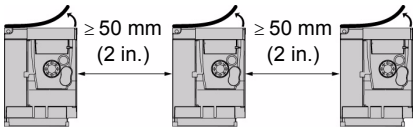

Free space ≥ 50 mm (2 in.) on each side. Vent cover should be removed for operation at surrounding air temperature above 50°C (122°F). The degree of protection becomes IP20.

With these types of mounting, the drive can be used up to an ambient temperature of 50°C (122°F), with a switching frequency of 4 kHz. Fanless drives need derating.

Derating curves

Derating curves for the nominal drive current (In) as a function of temperature, switching frequency and mounting type.

ATV12H0●●M2, ATV12H0●●M3, ATV12H018F1 to ATV12H037F1

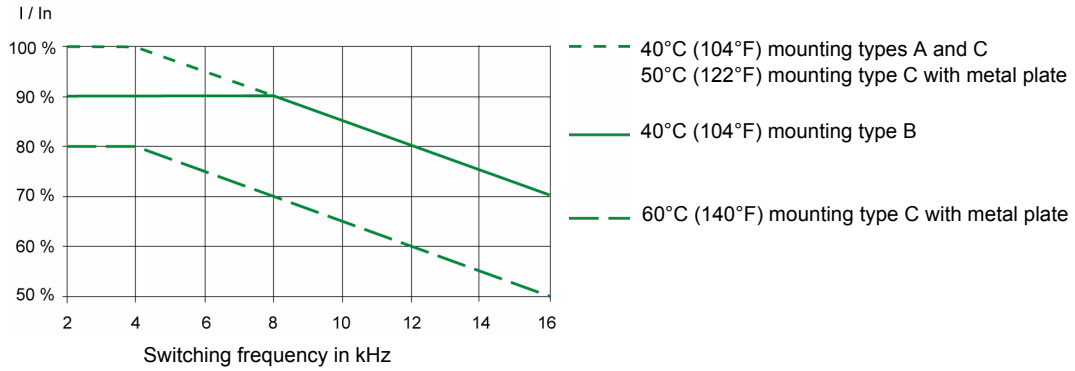

ATV12HU●●M2, ATV12H075F1, ATV12HU15M3 to ATV12HU40M3

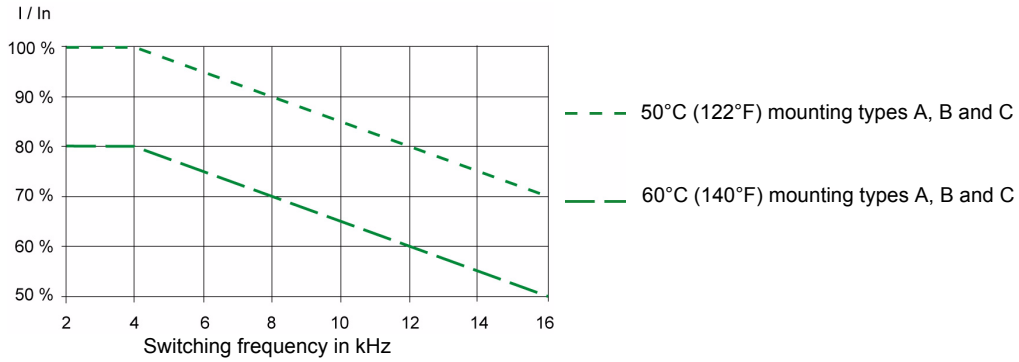

For intermediate temperatures (e.g. 55°C (131°F)), interpolate between two curves.

Bus voltage measurement procedure

⚠ ⚠ DANGER

HAZARD OF ELECTRIC SHOCK, EXPLOSION, OR ARC FLASH

Read and understand the precautions in “Before you begin” on page 5 before performing this procedure.

Failure to follow these instructions will result in death or serious injury.

The DC bus voltage can exceed 400 Vdc. Use a properly rated voltage-sensing device when performing this procedure. To measure the DC bus voltage:

1 Disconnect all power.

2 Wait 15 minutes to allow the DC bus to discharge.

3 Measure the voltage of the DC bus between the PA/+ and PC/– terminals to ensure that the voltage is less than 42 Vdc.

4 If the DC bus capacitors do not discharge completely, contact your local Schneider Electric representative. Do not repair or operate the drive.

Installing the EMC plates

EMC mounting plate: size 1 VW3A9523, size 2 VW3A9524 or size 3 VW3A9525 to be ordered separately

Mount the EMC mounting plate to the holes in the ATV12 using the 2 screws supplied, as shown in the drawings below.

Size 1, plate reference VW3A9523:
ATV12H018F1, ATV12H037F1, ATV12P037F1, ATV12H018M2, ATV12●0●●M2, ATV12●0●●M3

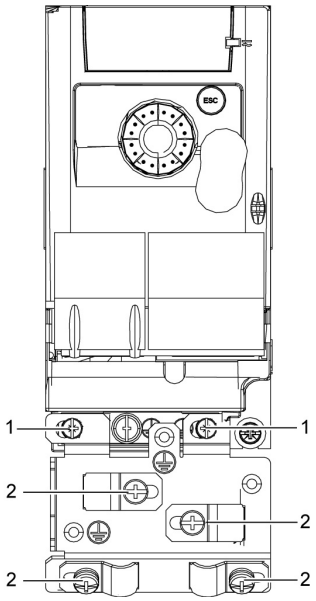

1. 2 fixing screws
2. 4 x M4 screws for attaching EMC clamps

Size 2, plate reference VW3A9524:
ATV12H075F1, ATV12HU●●M2, ATV12●U15M3, ATV12●U22M3

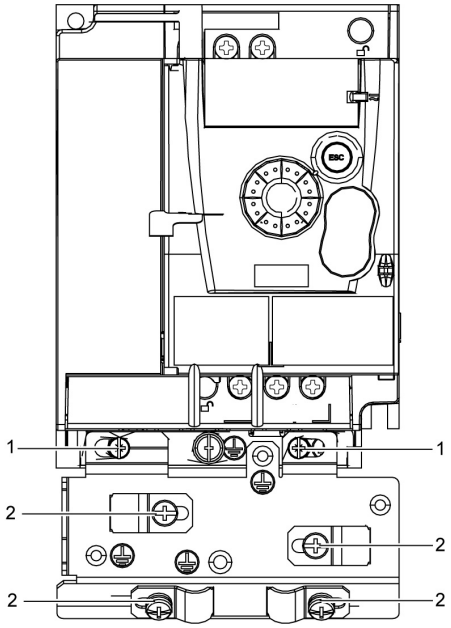

Size 3, plate reference VW3A9525:
ATV12●U30M3 and ATV12●U40M3

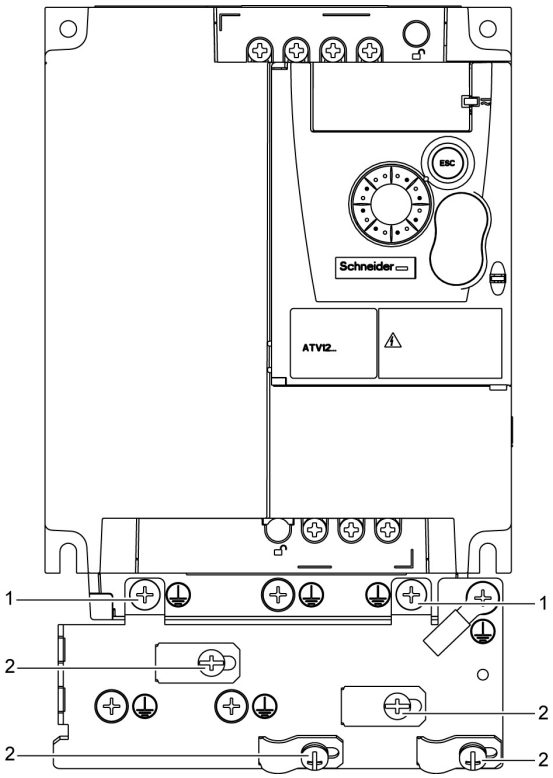

Recommendations

Keep the power cables separate from control circuits with low-level signals (detectors, PLCs, measuring apparatus, video, telephone). Always cross control and power cables at 90° if possible.

Power and circuit protection

Follow wire size recommendations according to local codes and standards.
Before wiring power terminals, connect the ground terminal to the grounding screws located below the output terminals (see Access to the motor terminals if you use ring terminals, page 20.

The drive must be grounded in accordance with the applicable safety standards. ATV12●●●●M2 drives have an internal EMC filter, and as such the leakage current is over 3.5 mA.
When upstream protection by means of a "residual current device" is required by the installation standards, a type A circuit breaker should be used for single-phase drives and type B for 3-phase drives. Choose a suitable model incorporating:

- HF current filtering
- A time delay which prevents tripping caused by the load from stray capacitance on power-up. The time delay is not possible for 30 mA devices. In this case, choose devices with immunity against accidental tripping, for example RCDs with **SI** type leakage current protection.

If the installation includes several drives, provide one "residual current device" per drive.

Control

For control and speed reference circuits, we recommend using shielded twisted cables with a pitch of between 25 and 50 mm (1 and 2 in.), connecting the shield to ground as outlined on page 25.

Length of motor cables

For motor cable lengths longer than 50 m (164 ft) for shielded cables and longer than 100 m (328 ft) for unshielded cables, please use motor chokes.
For accessory part numbers, please refer to the catalog.

Equipment grounding

Ground the drive according to local and national code requirements. A minimum wire size of 10 mm² (6 AWG) may be required to meet standards limiting leakage current.
.

⚠ ⚠ DANGER

HAZARD OF ELECTRIC SHOCK, EXPLOSION, OR ARC FLASH

- The drive panel must be properly grounded before power is applied.
- Use the provided ground connecting point as shown in the figure below.

Failure to follow these instructions will result in death or serious injury.

⚠ ⚠ DANGER

ATV12H075F1, ATV12H075M2 AND ATV12H075M3 - GROUND CONTINUITY HAZARD

An anodized heatsink can create an insulation barrier to the mounting surface. Ensure that you follow the recommended grounding connections.

Failure to follow these instructions will result in death or serious injury.

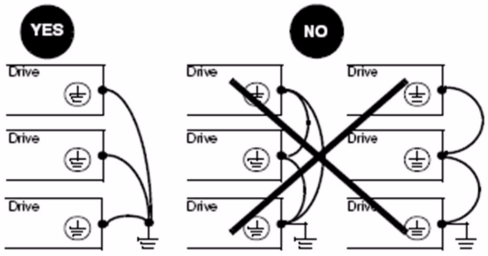

- Ensure that the resistance of the ground is one ohm or less.
- When grounding several drives, you must connect each one directly, as shown in the figure to the left.
- Do not loop the ground cables or connect them in series.

⚠ WARNING

RISK OF DRIVE DESTRUCTION

- The drive will be damaged if input line voltage is applied to the output terminals (U/T1,V/T2,W/T3).
- Check the power connections before energizing the drive.
- If replacing another drive, verify that all wiring connections to the drive comply with wiring instructions in this manual.

Failure to follow these instructions can result in death, serious injury or equipment damage.

⚠ WARNING

INADEQUATE OVERCURRENT PROTECTION

- Overcurrent protective devices must be properly coordinated.
- The Canadian Electrical Code and the National Electrical Code require branch circuit protection. Use the fuses recommended in this manual, page 105.
- Do not connect the drive to a power feeder whose short-circuit capacity exceeds the drive short-circuit current rating listed in this manual, page 105.

Failure to follow these instructions can result in death, serious injury or equipment damage.

General wiring diagram

ATV12●●●●F1 Single-phase supply 100...120 V

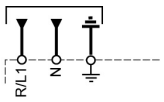

ATV12●●●●M2 Single-phase supply 200...240 V

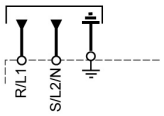

ATV12●●●●M3 Three-phase supply 200...240 V

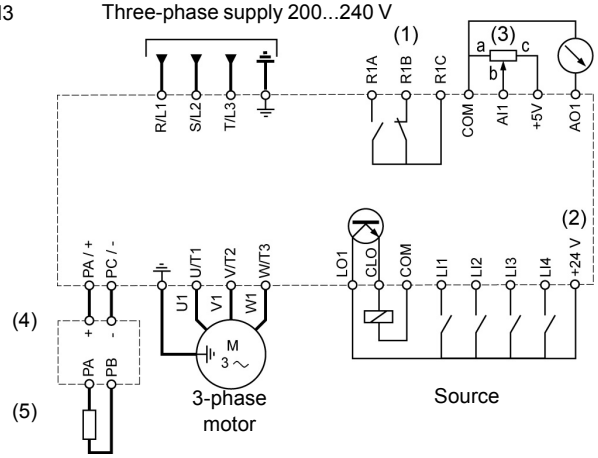

(1) R1 relay contacts, for remote indication of the drive status.
(2) Internal + 24 V ⎓. If an external source is used (+ 30 V ⎓ maximum), connect the 0 V of the source to the COM terminal, and do not use the + 24 V ⎓ terminal on the drive.
(3) Reference potentiometer SZ1RV1202 (2.2 kΩ) or similar (10 kΩ maximum).
(4) Optional braking module VW3A7005
(5) Optional braking resistor VW3A7●●● or other acceptable resistor. See the possible resistor values in the catalog.

Note:

- Use transient voltage surge suppressors for all inductive circuits near the drive or coupled to the same circuit (relays, contactors, solenoid valves, etc).
- The ground terminal (green screw) is located on the opposite side in comparison with its position on the ATV11 (see wiring trap label).

Wiring labels

ATV12H•••F1

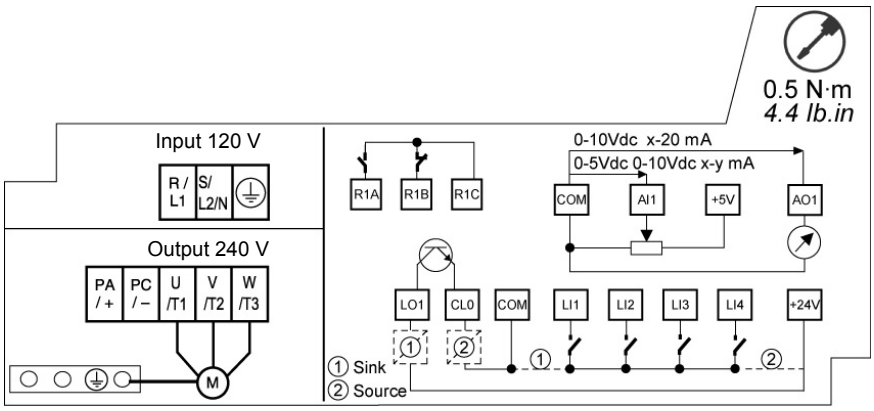

ATV12H•••M2

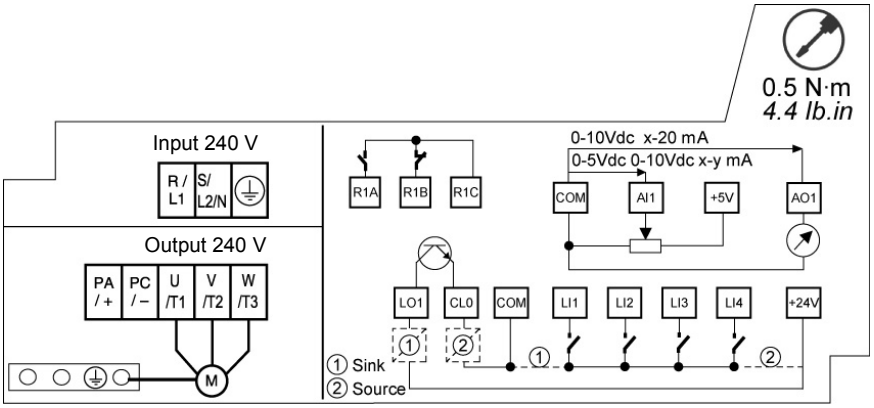

ATV12H•••M3

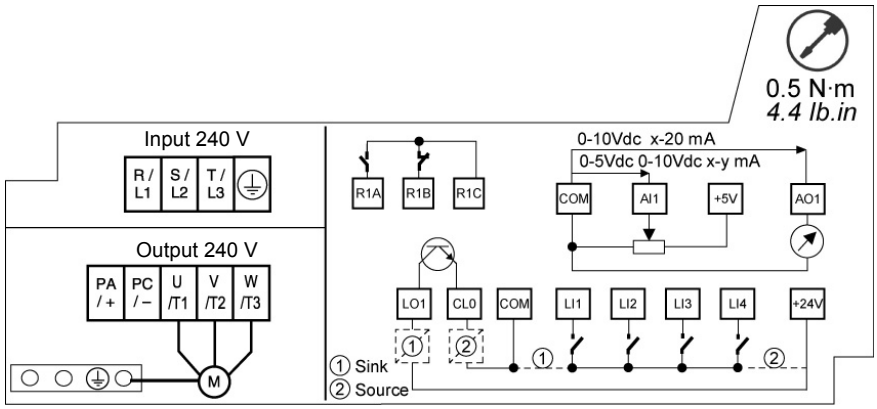

Power terminals

Line supply is at the top of the drive, the motor power supply is at the bottom of the drive. The power terminals can be accessed without opening the wiring trap if you use stripped wire cables.

Access to the power terminals

Access to the terminals if you use stripped wire cables

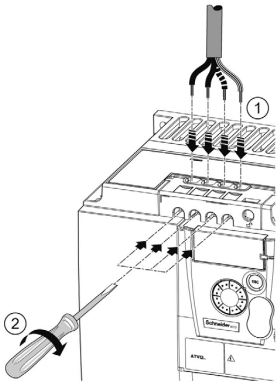

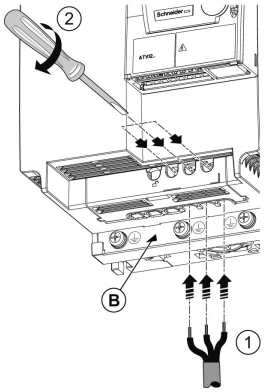

⚠ ⚠ DANGER

HAZARD OF ELECTRIC SHOCK, EXPLOSION, OR ARC FLASH

Replace the wiring trap before applying power.

Failure to follow these instructions will result in death or serious injury.

⚠ CAUTION

RISK OF BODY INJURY

Use pliers to remove snap-off of the wiring trap.

Failure to follow these instructions can result in injury or equipment damage.

Access to the line supply terminals to connect ring terminals

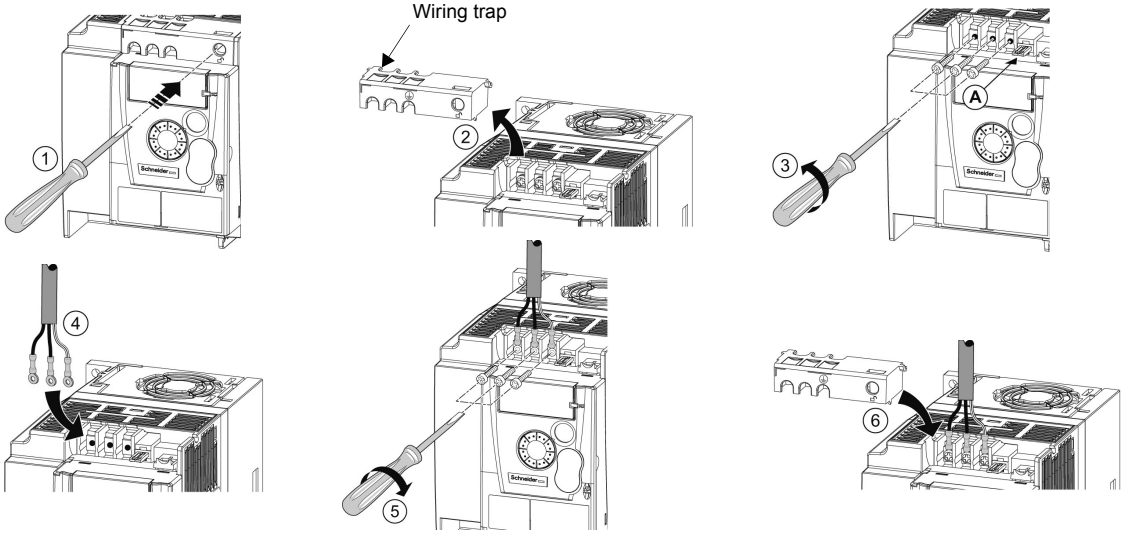

A) IT jumper on ATV12●●●●M2
B) Grounding screws located below the output terminals.

Access to the motor terminals if you use ring terminals

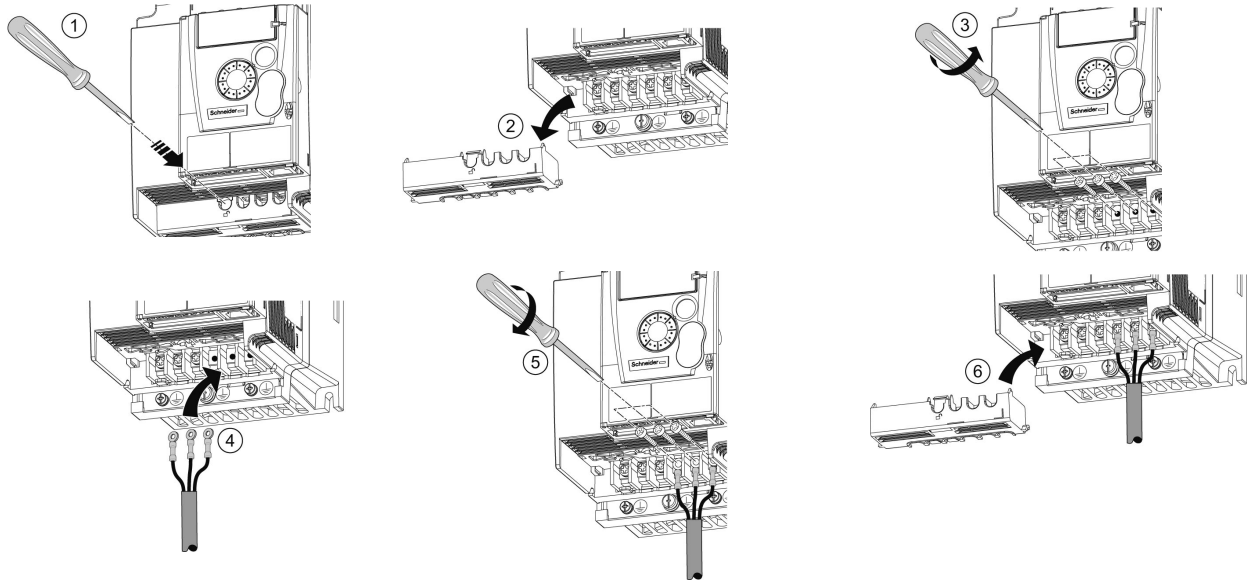

Characteristics and functions of power terminals

Terminal	Function	For ATV12
⏚	Ground terminal	All ratings
R/L1 - S/L2/N	Power supply	1-phase 100…120 V
R/L1 - S/L2/N		1-phase 200…240 V
R/L1 - S/L2 - T/L3		3-phase 200…240 V
PA/+	+ output (dc) to the braking module DC Bus (divisible part on wiring trap)	All ratings
PC/-	– output (dc) to the braking module DC Bus (divisible part on wiring trap)	All ratings
PO	Not used	
U/T1 - V/T2 - W/T3	Outputs to the motor	All ratings

Arrangement of the power terminals

ATV12H 018F1, 037F1, 0●●M2, 0●●M3

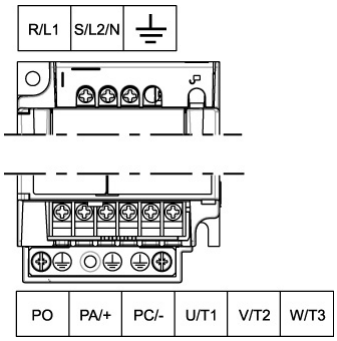

ATV12H	Applicable wire size (1) mm² (AWG)	Recommended wire size (2) mm² (AWG)	Tightening torque (3) N·m (lb.in)
018F1 037F1 0●●M2 0●●M3	**2** to 3.5 (**14** to 12)	2 (14)	0.8 to 1 (7.1 to 8.9)

ATV12H 075F1, U●●M2, U15M3, U22M3

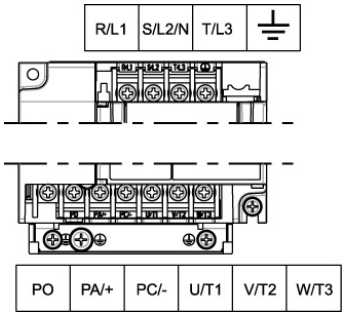

ATV12H	Applicable wire size (1) mm² (AWG)	Recommended wire size (2) mm² (AWG)	Tightening torque (3) N·m (lb.in)
075F1 U●●M2	**3.5** to 5.5 (**12** to 10)	5.5 (10)	1.2 to 1.4 (10.6 to 12.4)
U15M3 U22M3	**2** to 5.5 (**14** to 10)	2 (14) for U15M3 3.5 (12) for U22M3	

ATV12H U30M3, U40M3

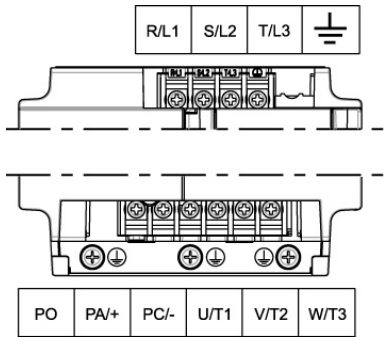

ATV12H	Applicable wire size (1) mm² (AWG)	Recommended wire size (2) mm² (AWG)	Tightening torque (3) N·m (lb.in)
U30M3 U40M3	5.5 (10)	5.5 (10)	1.2 to 1.4 (10.6 to 12.4)

(1) The value in bold corresponds to the minimum wire gauge to permit secureness.
(2) 75°C (167 °F) copper cable (minimum wire size for rated use)
(3) Recommended to maximum value.

Control terminals

Keep the control circuits away from the power cables. For control and speed reference circuits, we recommend using shielded twisted cables with a pitch of between 25 and 50 mm (1 and 2 in.), connecting the shielding as outlined on page 25.

Access to the control terminals

To access the control terminals, open the cover.
Note: For information regarding HMI button functions, see "HMI description" on page 31.

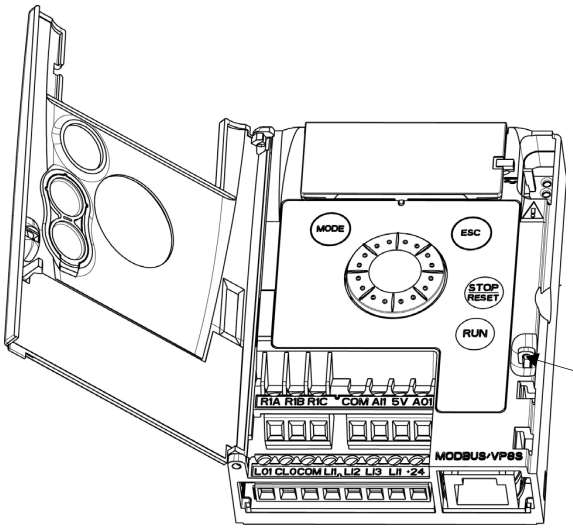

It is possible to lock the cover with a lead seal.

Arrangement of the control terminals

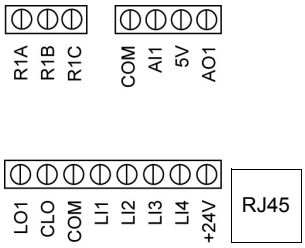

Note: To connect cables, use a slotted screwdriver 0.6 x 3.5.

R1A	Normally open (NO) contact of the relay
R1B	Normally closed (NC) contact of the relay
R1C	Common pin of the relay
COM	COMmon of analog and logic I/Os
AI1	Analog Input
5V	+5V supply provided by the drive
AO1	Analog Output
LO1	Logic Output (collector)
CLO	Common of the Logic Output (emitter)
COM	COMmon of analog and logic I/Os
LI1	Logic Input
LI2	Logic Input
LI3	Logic Input
LI4	Logic Input
+24V	+24 V supply provided by the drive
RJ45	Connection for SoMove software, Modbus network or remote display.

ATV12 Control terminals	Applicable wire size (1) mm² (AWG)	Tightening torque (2) N·m (lb.in)
R1A, R1B, R1C	**0.75** to 1.5 (**18** to 16)	0.5 to 0.6 (4.4 to 5.3)
Other terminals	**0.14** to 1.5 (**26** to 16)	

(1) The value in bold corresponds to the minimum wire gauge to permit secureness.
(2) Recommended to maximum value.

Characteristics and functions of the control terminals

Terminal	Function	Electrical characteristics
R1A	NO contact of the relay	Min. switching capacity: • 5 mA for 24 V ⎓ Maximum switching capacity: • 2 A for 250 V ∿ and for 30 V ⎓ on inductive load (cos φ = 0.4 and L/R = 7 ms) • 3 A for 250 V ∿ and 4 A for 30 V ⎓ on resistive load (cos φ = 1 and L/R = 0) • response time: 30 ms maximum.
R1B	NC contact of the relay	
R1C	Common pin of the relay	
COM	Common of analog and logic I/Os	
AI1	Voltage or current analog input	• resolution: 10 bits • precision: ± 1% at 25°C (77°F) • linearity: ± 0.3% (of full scale) • sampling time: 20 ms ± 1 ms Analog voltage input 0 to +5 V or 0 to +10 V (maximum voltage 30 V) impedance: 30 kΩ Analog current input x to y mA, impedance: 250 Ω
5V	Power supply for reference potentiometer	• precision: ± 5% • maximum current: 10 mA
AO1	Voltage or current analog output (collector)	• resolution: 8 bits • precision: ± 1% at 25°C (77°F) • linearity: ± 0.3% (of full scale) • refresh time: 4 ms (maximum 7 ms) Analog voltage output: 0 to +10 V (maximum voltage +1%) • minimum output impedance: 470 Ω Analog current output: x to 20 mA • maximum output impedance: 800 Ω
LO1	Logic output	• voltage: 24 V (maximum 30 V) • impedance: 1 kΩ, maximum 10 mA (100 mA in open collector) • linearity: ± 1% • refresh time: 20 ms ± 1 ms.
CLO	Common of the logic output (emitter)	
LI1 LI2 LI3 LI4	Logic inputs	Programmable logic inputs • +24 V power supply (maximum 30 V) • impedance: 3.5 kΩ • state: 0 if < 5 V, state 1 if > 11 V in positive logic • state: 1 if < 10 V, state 0 if > 16 V or switched off (not connected) in negative logic • sampling time: < 20 ms ± 1 ms.
+24V	+ 24 V supply provided by the drive	+ 24 V -15% +20% protected against short-circuits and overloads. Maximum customer current available 100 mA

Control connection diagrams

The Logic inputs type nPL parameter page 50 is used to adapt the operation of the logic inputs to the technology of the programmable controller outputs.

- Set the parameter to POS for Source operation.
- Set the parameter to nEG for Sink operation.

Source - using external supply

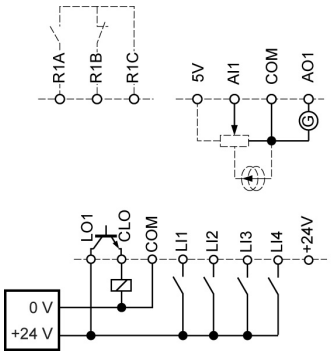

Sink - using external supply

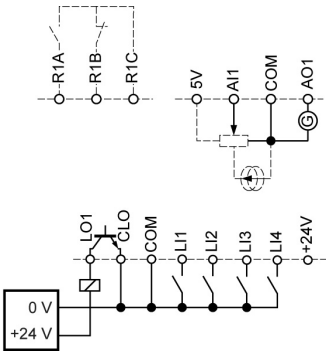

Source - using internal supply

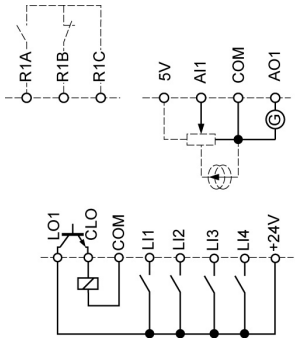

Sink - using internal supply

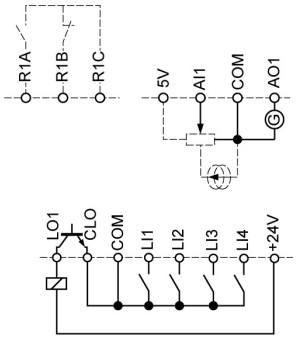

⚠ DANGER

UNINTENDED EQUIPMENT OPERATION

- The accidental grounding of logic inputs configured for Sink Logic can result in unintended activation of drive functions.
- Protect the signal conductors against damage that could result in unintentional conductor grounding.
- Follow NFPA 79 and EN 60204 guidelines for proper control circuit grounding practices.

Failure to follow these instructions will result in death or serious injury.

⚠ DANGER

UNINTENDED EQUIPMENT OPERATION

- Do not used a PLC to command the logic input of the drive in sink mode
- If this behaviour is required, contact Schneider Office for additional information.

Failure to follow these instructions will result in death or serious injury.

Electromagnetic compatibility (EMC)

IMPORTANT: The high frequency equipotential ground connection between the drive, motor, and cable shielding does not eliminate the need to connect the ground (PE) conductors (green-yellow) to the appropriate terminals on each unit. See Wiring recommendations on page 15.

Principle and precautions

- Grounds between the drive, motor, and cable shielding must have high frequency equipotentiality.
- When using shielded cable for the motor, use a 4-conductor cable so that one wire will be the ground connection between the motor and the drive. The size of the ground conductor must be selected in compliance with local and national codes. The shield can then be grounded at both ends. Metal ducting or conduit can be used for part or all of the shielding length, provided there is no break in continuity.
- When using shielded cable for Dynamic Brake (DB) resistors, use a 3-conductor cable so that one wire will be the ground connection between the DB resistor assembly and the drive. The size of the ground conductor must be selected in compliance with local and national codes. The shield can then be grounded at both ends. Metal ducting or conduit can be used for part or all of the shielding length, provided there is no break in continuity.
- When using shielded cable for control signals, if the cable is connecting equipment that is close together and the grounds are bonded together, then both ends of the shield can be grounded. If the cable is connected to equipment that may have a different ground potential, then ground the shield at one end only to prevent large currents from flowing in the shield. The shield on the ungrounded end may be tied to ground with a capacitor (for example: 10 nF, 100 V or higher) in order to provide a path for the higher frequency noise. Keep the control circuits away from the power circuits. For control and speed reference circuits, we recommend using shielded twisted cables with a pitch of between 25 and 50 mm (0.98 and 1.97 in.) Keep the control circuits away from the power circuits. For control and speed reference circuits, we recommend using shielded twisted cables with a pitch of between 25 and 50 mm (0.98 and 1.97 in.)
- Ensure maximum separation between the power supply cable (line supply) and the motor cable.
- The motor cables must be at least 0.5 m (20 in.) long.
- Do not use surge arresters or power factor correction capacitors on the variable speed drive output.
- If using an additional input filter, it should be mounted as closed as possible to the drive and connected directly to the line supply via an unshielded cable. Link 1 on the drive is via the filter output cable.
- For installation of the optional EMC plate and instructions for meeting IEC 61800-3 standard, refer to the section entitled “Installing the EMC plates” and the instructions provided with the EMC plates.

⚠ ⚠ DANGER

HAZARD OF ELECTRIC SHOCK, EXPLOSION OR ARC FLASH

- Do not expose cable shielding except where connected to ground at the metal cable glands and underneath the grounding clamps.
- Ensure that there is no risk of the shielding coming into contact with live components.

Failure to follow these instructions will result in death or serious injury.

Installation diagram (example)

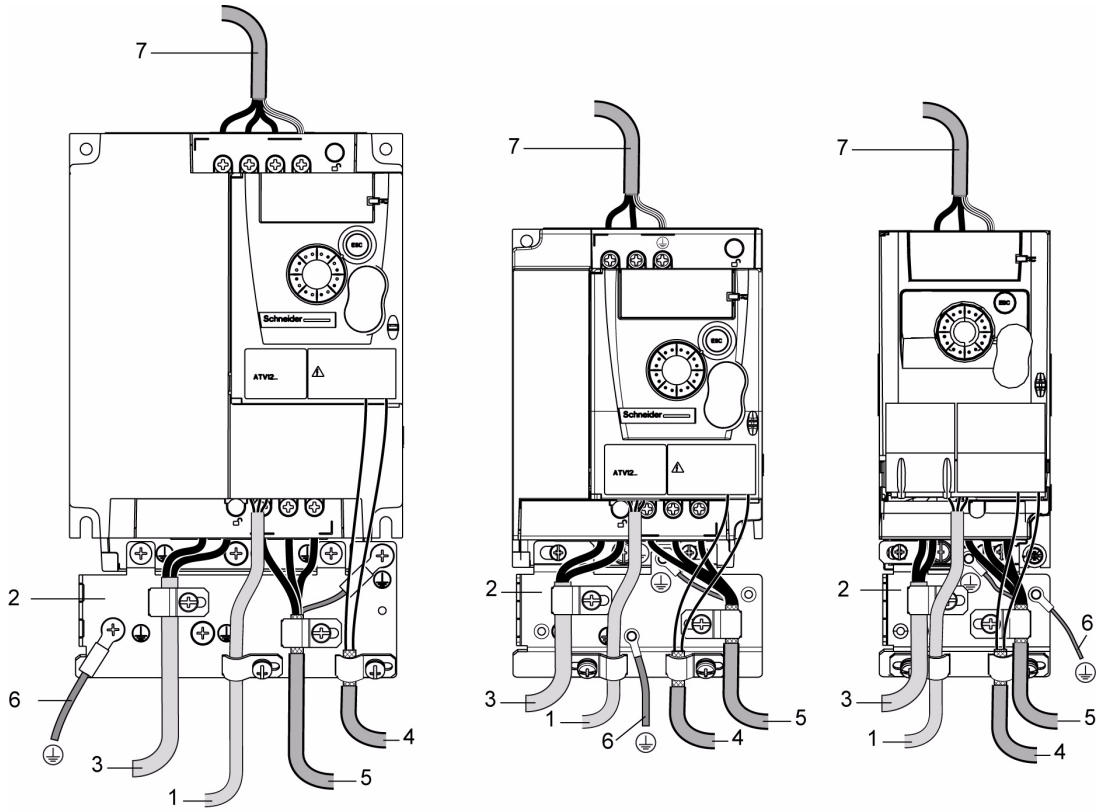

1. Non-shielded wires for the output of the status relay contacts.
2. Sheet steel grounded casing not supplied with the drive, to be mounted as indicated on the diagram.
3. PA and PC terminals, to the braking module DC bus
4. Shielded cable for connecting the control/signalling wiring.
   For applications requiring several conductors, use small cross-sections (0.5 mm^2, 20 AWG).
   The shielding must be connected to ground at both ends. The shielding must be continuous and intermediate terminals must be in EMC shielded metal boxes.
5. Shielded cable for motor connection with shielding connected to ground at both ends.
   This shielding must be continuous, and if there are any intermediate terminals, these must be in an EMC shielded metal box. The motor cable PE grounding conductor (green-yellow) must be connected to the grounded casing.
6. Grounding conductor, cross-section 10 mm²
   (6 AWG) according to IEC 61800-5-1 standard.
7. Power input (non shielded cable)

Attach and ground the shielding of cables 4 and 5 as close as possible to the drive:
- Expose the shielding.
- Use cable clamps of an appropriate size on the parts from which the shielding has been exposed, to attach them to the casing. The shielding must be clamped tightly enough to the metal plate to ensure correct contact.
- Types of clamp: stainless steel (delivered with the optional EMC plate).

EMC conditions for ATV12●●●●M2

C1 EMC category is reached if length of shielded cable is 5 m (16.4 ft) maximum and Switching frequency SFr page 57 is 4, 8 or 12 kHz.
C2 EMC category is reached if length of shielded cable is 10 m (32.8 ft) maximum and Switching frequency SFr is 4, 8 or 12 kHz and if length of shielded cable is 5 m (16.4 ft) maximum for all other values of Switching frequency SFr.

Internal EMC filter on ATV12●●●●M2

All ATV12●●●●M2 drives have a built-in EMC filter. As a result they exhibit leakage current to ground. If the leakage current creates compatibility problems with your installation (residual current device or other), then you can reduce the leakage current by opening the IT jumper as shown below. In this configuration EMC compliance is not guaranteed.

CAUTION

DRIVE LIFETIME REDUCTION

On ATV12●●●●M2 ratings, if the filters are disconnected, the drive's switching frequency must not exceed 4 kHz. Refer to Switching frequency SFr page 57 for adjustment,

Failure to follow these instructions can result in equipment damage.

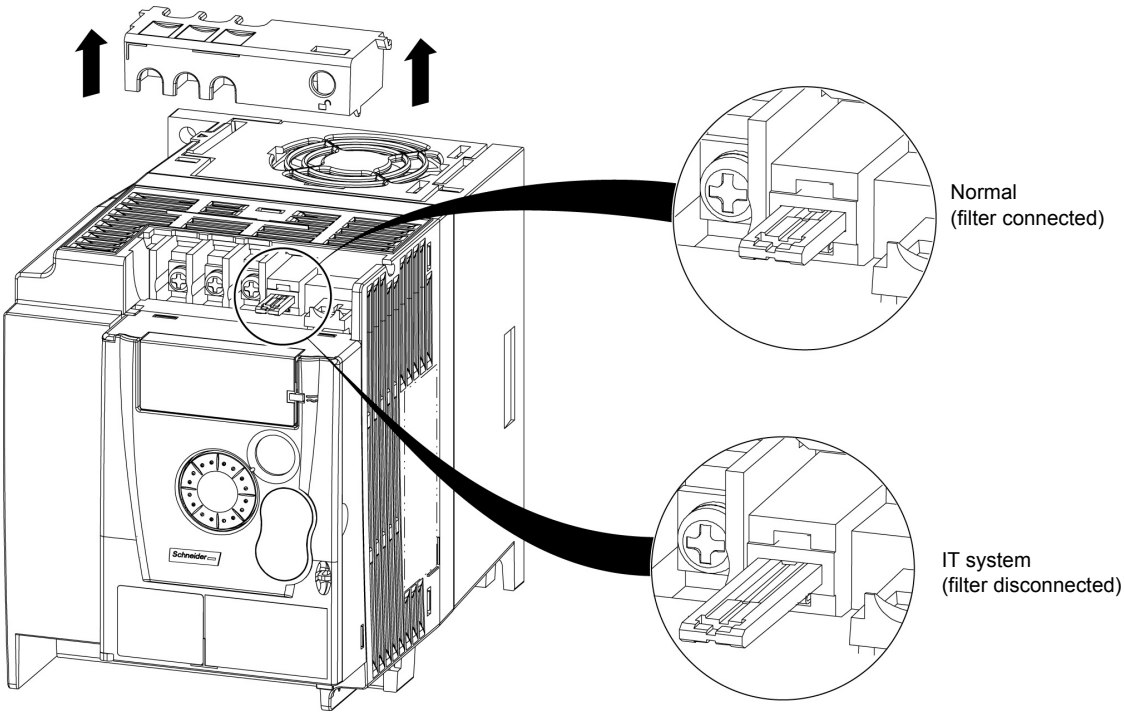

Check list

Read carefully the safety information in the user manual and the catalogue. Before starting up the drive, please check the following points regarding mechanical and electrical installations, then use and run the drive.
For complete documentation, refer to www.schneider-electric.com.

1. Mechanical installation

- For drive mounting types and recommendations on the ambient temperature, please refer to the Mounting and temperature conditions instructions on page 12.
- Mount the drive vertically as specified, see Mounting and temperature conditions instructions on page 12.
- The use of the drive must be in agreement with the environments defined by the standard 60721-3-3 and according to the levels defined in the catalogue.
- Mount the options required for your application, refer to the catalogue.

2. Electrical installation

- Connect the drive to the ground, see Equipment grounding on page 15.
- Ensure that the input power voltage corresponds to the drive nominal voltage and connect the line supply as shown in General wiring diagram on page 17.
- Ensure you use appropriate input power fuses and circuit breaker on page 105
- Wire the control terminals as required, see Control terminals on page 22. Separate the power cable and the control cable according to the EMC compatibility rules on page 25.
- The ATV12●●●●M2 range integrates an EMC filter. The leakage current can be reduced using the IT jumper as explained in the paragraph Internal EMC filter on ATV12●●●●M2 on page 27.
- Ensure that motor connections correspond to the voltage (star, delta).

3. Use and run the drive

- Start the drive and you will see Standard motor frequency bFr page 44 at the first power on. Check that the frequency defined by the frequency bFr (the factory setting is 50 Hz) is in accordance with the frequency of the motor, see First power-up on page 33. For the following power on, you will see rdY on the HMI.
- MyMenu (upper part of CONF mode) allows you to configure the drive for most applications (see page 44).
- Factory / recall customer parameter set FCS function page 45 allows you to reset the drive with factory settings.

Drive factory settings

The Altivar 12 is factory-set for the most common operating conditions (motor rating according to drive rating):

- Display: drive ready (rdY) motor stopped or motor frequency reference while running
- Automatic adaptation of the deceleration ramp in the event of overvoltage on braking.
- No automatic restarting after a detected fault is cleared
- Logic inputs:
  - LI1: forward (2-wire transitional control)
  - LI2, LI3, LI4: no assignment
- Logic output: LO1: no assignment
- Analog input: AI1 (0 to + 5 V) speed reference
- Relay R1: the contact opens in the event of a detected fault (or drive off)
- Analog output AO1: no assignment

Code	Description	Value	page
bFr	Standard motor frequency	50 Hz	44
UnS	Rated motor voltage	230 V	55
ACC	Acceleration	3 seconds	62
dEC	Deceleration	3 seconds	62
LSP	Low speed	0 Hz	44 75
HSP	High speed	50 Hz	76
Ctt	Motor control type	Standard U/F law	55
UFr	IR compensation (law U/F)	100%	56
ItH	Motor thermal current	equal to nominal motor current (value determined by drive rating)	80
SdC1	Automatic DC injection current	0.7 x nominal drive current, for 0.5 seconds.	65
SFr	Switching frequency	4 kHz	57

If the above values are compatible with the application, the drive can be used without changing the settings.

Drive factory wiring diagram

ATV12●●●●M3

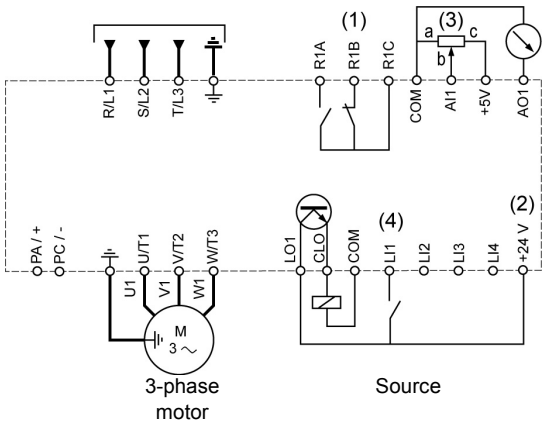

(1) R1 relay contacts, for remote indication of the drive status.
(2) Internal + 24 V ⎓. If an external source is used (+ 30 V ⎓ maximum), connect the 0 V of the source to the COM terminal, and do not use the + 24 V ⎓ terminal on the drive.
(3) Reference potentiometer SZ1RV1202 (2.2 kΩ) or similar (10 kΩ maximum).
(4) Forward

Status relay, unlocking

The R1 status relay is energized when the drive power is applied with no fault detected. It de-energizes in the event of a detected fault or when the drive power is removed.

The drive is reset after a detected fault:

- by switching off the drive until the display disappears completely, then switching on again
- automatically in the cases described in the "automatic restart" function, FLt- menu, Automatic restart Atr page 77 set to YES
- via a logic input when this input is assigned to the "drive reset" function, FLt- menu, Detected fault reset assignment rSF page 77 set to L●H.

Drive thermal detection

Thermal detection is provided by a built-in PTC probe in the power module.

Drive ventilation

Ratings up to 0.75 kW (1 HP) do not include a fan. The fan runs only when the drive thermal state requires ventilation.

Motor thermal detection

Function:

Thermal detection by calculating the I^2t.

Note: The motor thermal state memory returns to zero when the drive power is cycled if Motor thermal state memo MtM **page** 80 **is not set to** YES**.**

CAUTION
RISK OF DAMAGE TO THE MOTOR The use of external overload protection is required under the following conditions: • Repowering up the product since there is no motor thermal state memory. • Running multiple motors • Running motors rated at less than 20% of the nominal drive current • Using motor switching **Failure to follow these instructions can result in equipment damage.**

CAUTION
MOTOR OVERHEATING • This drive does not provide direct thermal protection for the motor. • Use of a thermal sensor in the motor may be required for protection at all speeds or loading conditions. • Consult the motor manufacturer for the thermal capability of the motor when operated over the desired speed range **Failure to follow these instructions can result in equipment damage.**

HMI description

Functions of the display and keys

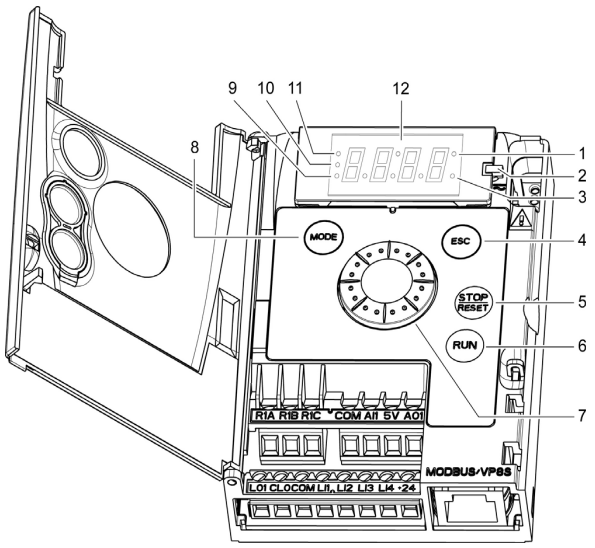

1. Value LED (a) (b).
2. Charge LED
3. Unit LED (c)
4. ESC button: Exits a menu or parameter, or aborts the displayed value to return to the previous value in the memory.
5. STOP button: stops the motor (could be hidden by door if function disabled). **Important: See instructions for "RUN/STOP" cover removal.**
6. RUN button: Starts running if the function is configured (could be hidden by door if function disabled).
7. Jog dial
   - Acts as a potentiometer in local mode.
   - For navigation when turned clockwise or counterclockwise
   - and selection / validation when pushed.
   This action is represented by this symbol

8. MODE button
   Switches between the control/programming modes. The MODE button is only accessible with the HMI door open.
9. CONFIGURATION mode LED (b)
10. MONITORING mode LED
11. REFERENCE mode LED
12. Four "7-segment" displays

(a) If illuminated, indicates that a **value** is displayed, for example, 0.5 is displayed for "0.5"
(b) When changing a value the Configuration mode LED and the value LED are on steady.
(c) If illuminated, indicates that a unit is displayed, for example, AMP is displayed for "Amps"

⚠ WARNING

LOSS OF CONTROL

The stop buttons on ATV12 drive and on the remote keypad display can be programmed to not have priority. To retain stop key priority, set Stop key priority PSt page 60 to YES. Do not set PSt to nO unless exterior stopping method(s) exist.

Failure to follow these instructions can result in death, serious injury, or equipment damage.

Remote control

Remote operation and programming by HMI is possible using the optional remote HMI part VW3A1006. The dimensions are 70 mm (2.76 in) x 50 mm (2.76 in).

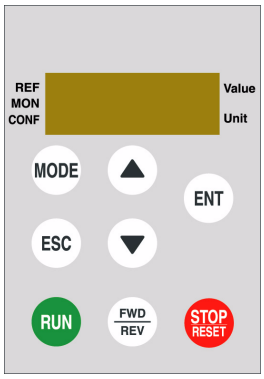

Important: when connected, the remote control shows an exact copy of the drive display, it is totally interactive with the embedded keypad.

First power-up

At first power-up you are prompted to set Standard motor frequency bFr page 44. Next time power is applied rdY appears. Operating mode selection is then possible using the MODE key as detailed below.

Menus structure

Access to menus and parameters is possible through 3 modes: Reference rEF page 36, Monitoring MOn page 37 and Configuration COnF page 43. Switching between these modes is possible at any time using the MODE key or Jog Dial on keyboard. The first press on the MODE key moves from the current position to the top of the branch. A second press switches to the next mode.

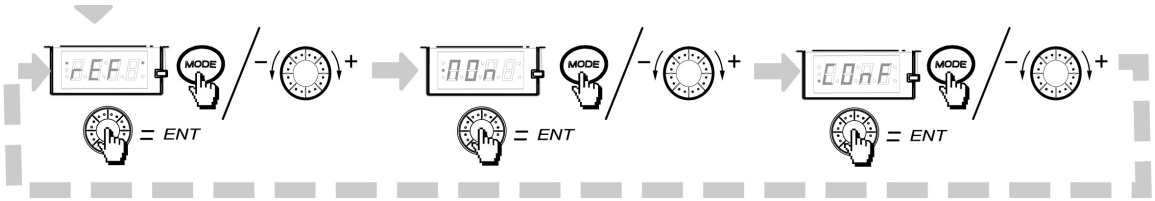

Menu customization using SoMove

ATV12 factory settings enable drive operation with most applications. You can use SoMove software to customize the "MyMenu" and FULL menus of COnF mode (see page 43), by selecting which menus and parameters will be hidden or accessible for the user. Once the configuration has been adjusted, it can be downloaded to the ATV12 by connecting the drive to the computer or by downloading the configuration through the multiloader or simpleloader.
SoMove can be used to operate the drive for testing and commissioning.

Description	References
SoMove	-
USB/RJ45 cable	TCSMCNAM3M002P
Simple-loader tool	VW3A8120
Multi-loader tool	VW3A8121
Bluetooth adapter	VW3A8114

For further information, please consult the SoMove help.

Structure of parameter tables

The modes, sections, menus, sub-menus and parameter tables description is organized as below.
Note: Parameters containing the sign ( ) in the code column can be modified with the drive running or stopped

Example:

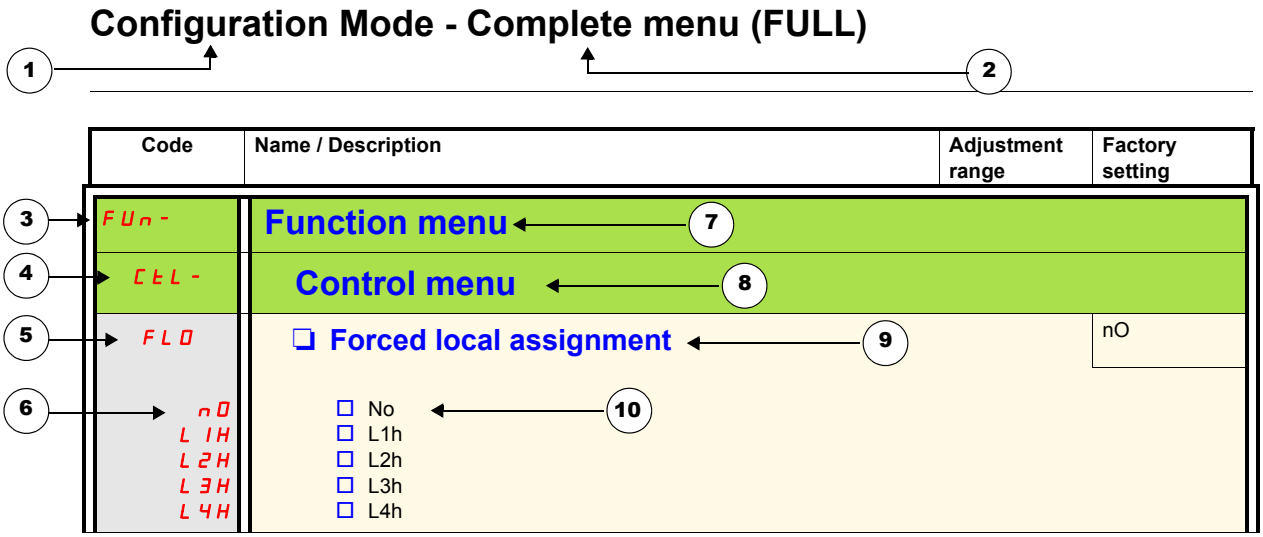

1. Name of mode
2. Name of section, if any
3. Menu code on 4-digit display, followed by a "-"
4. Sub-menu code on 4-digit display, if any
5. Parameter code
6. Value code
7. Name of menu
8. Name of sub-menu
9. Parameter description
10. Possible value(s) / state of parameter, if any.

Function compatibility table

	Preset speed (page 68)	PI regulator (page 70)	Jog operation (page 66)	Auto DC injection (page 65)	Catch on the fly (page 78)	Fast stop (page 64)	Freewheel (page 64)
Preset speed (page 68)			↑				
PI regulator (page 70)			●				
Jog operation (page 66)	←	●		←			
Auto DC injection (page 65)			↑				↑
Catch on the fly (page 78)							←
Fast stop (page 64)							↑
Freewheel (page 64)				←	↑	←	

● Incompatible functions

Priority function (function which can be active at the same time)

Compatible functions

Not applicable

← ↑ The function indicated by the arrow has priority over the other.

Stop functions have priority over run commands.
Speed references via logic command have priority over analog references.

Reference Mode rEF

Use the reference mode to monitor and if local control is enabled (Reference channel 1 Fr1 page 44 set to AIU1) adjust the actual reference value by rotating the jog dial.
When local control is enabled, the jog dial on the HMI acts as a potentiometer to change the reference value up and down within the limits preset by other parameters (LSP or HSP). There is no need to press the ENT key to confirm the change of the reference.
If local command mode is disabled, using Command channel 1 Cd1 page 61, only reference values and units are displayed. The value will be "read only" and cannot be modified by the jog dial (the reference is no longer given by the jog dial but from an AI or other source).
The actual reference displayed depends on the choice made in Reference channel 1 Fr1 page 60.

Organization tree

(1) Depending on the active reference channel
Possible values:
LFr
AIU1
FrH
rPI
rPC

(2) 2s or ESC

Displayed parameter value and unit of the diagram is given as examples

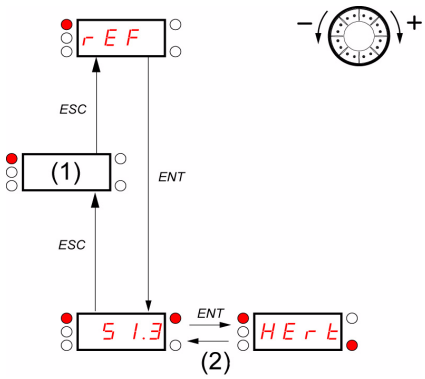

Value - Unit

Code	Name/Description	Adjustment range	Factory settings
LFr (1)	❑ **External reference value** Frequency reference visible if reference channel active is remote display. Reference channel 1 Fr1 page 60 set to LCC or Forced local reference FLOC page 61 set to LCC. This parameter allows to modify the frequency reference with the jog dial. Visibility depends on the drive settings.	-400 to +400 Hz	-
AIU1 (1)	❑ **Analog input virtual** This parameter allows to modify the frequency reference with an analog input. Reference channel 1 Fr1 page 60 set to AIU1 or Forced local reference FLOC page 61 set to AIU1 or PID manual reference PIM page 72 set to AIU1. Visibility depends on the drive settings.	0 to 100 % of HSP	-
FrH AI1 LCC Mdb AIU1	❑ **Speed reference** Actual frequency reference. This parameter is in read-only mode. Visibility depends on the drive settings. ☐ Terminal ☐ Remote display ☐ Modbus ☐ Integrated display with Jog dial	0 Hz to HSP	-
rPI (1)	❑ **Internal PID reference** This parameter allows to modify the PID internal reference with the jog dial. Visibility depends on the drive settings.	0 to 100%	-
rPC	❑ **PID reference value** This parameter is the PID reference expressed as a %.	0 to 100%	-

(1) It is not necessary to press the ENT key to confirm the modification of the reference.

Parameter that can be modified during operation or when stopped.

Monitoring mode MOn

When the drive is running, the value displayed is that of one of the monitoring parameters. The default value displayed is the motor Output frequency rFr page 38.
While the value of the desired new monitoring parameter is being displayed, press a second time on the jog dial button to display the units.

Organization tree

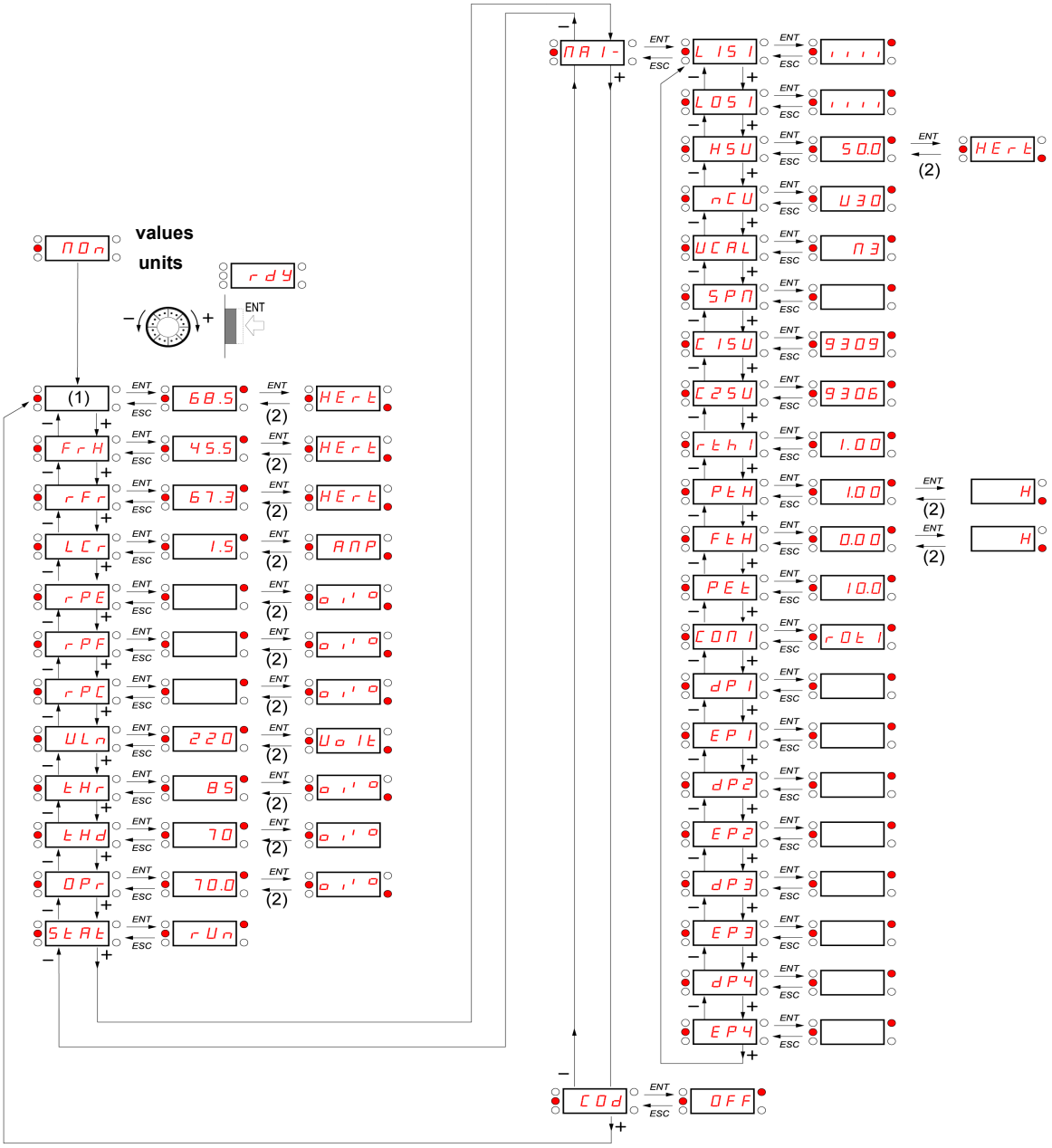

(1) Depending on reference channel active.
Possible values:
LFr
AIU1

(2) 2 sec or ESC

Displayed parameter values and units of the diagram are given as examples.

Code	Name/Description	Unit
LFr	❑ **External reference value** External keypad or local force mode configured. Forced local reference FLOC page 61 set to LCC and and Forced local assignment FLO page 61 different to nO. Displays the speed reference coming from the remote keypad. This value is not visible in factory setting.	Hz
AIU1	❑ **Analog input virtual** Embedded keypad active or local force mode configured, Forced local reference FLOC page 61 set to AIU1 and Forced local assignment FLO page 61 different to nO. Displays the speed reference coming from the jog dial. This value is not visible in factory setting.	%
FrH	❑ **Speed reference** Actual frequency reference.	Hz
rFr	❑ **Output frequency** This function provides the estimated motor speed. It corresponds to the estimated motor frequency (on the motor shaft). In Standard law Std page 55, the Output frequency rFr is equal to stator frequency. In Performance law PErF page 55, the Output frequency rFr motor speed is equal to the estimated motor speed. Range: -400 to 400 Hz	Hz
LCr	❑ **Motor current** Estimation of the effective motor current from phase current measurements with an accuracy of 5%. During DC injection, the current displayed is the maximum value of current injected in the motor.	A
rPE	❑ **PID error** Visible only if the PID function is configured (PID feedback assignment PIF page 70 set to nO). See PID diagram on page 69	%
rPF	❑ **PID Feedback** Visible only if PID function configured (PID feedback assignment PIF page 70 set to nO). See PID diagram on page 69	%
rPC	❑ **PID reference** Visible only if PID function configured (PID feedback assignment PIF page 70 set to nO). See PID diagram on page 69	%
ULn	❑ **Main voltage** Line voltage from the point of view of the DC bus, motor running or stopped.	V
tHr	❑ **Motor thermal state** Display of the motor thermal state. Above 118%, the drive trips in Motor overload OLF page 95.	%
tHd	❑ **Drive thermal state** Display of the drive thermal state. Above 118%, the drive trips in Drive overheat OHF page 95.	%
OPr	❑ **Output power** This parameter displays the motor power (on the shaft) that is estimated by the drive.	%

Parameter that can be modified during operation or when stopped.

Code	Name/Description
StAt	❑ **Product status** This parameter shows the state of the drive and motor. rdY ☐ Drive ready rUn ☐ Drive running, the last six segments to the right of the code also indicate direction and speed. ACC ☐ Acceleration, the last six segments to the right of the code also indicate direction and speed. dEc ☐ Deceleration, the last six segments to the right of the code also indicate direction and speed. dCb ☐ DC injection braking in progress CL1 ☐ Current limit, the four segments located on right down of display are blinking. nSt ☐ Freewheel stop control Obr ☐ Auto-adapted deceleration CtL ☐ Controlled stop on mains phase loss tUn ☐ Auto-tuning in progress FSt ☐ Fast stop nLP ☐ No line power. When the control part is energized via the RJ45 connector and there is no power on the main input and no run order is present.

Code	Name/Description	Unit
MAI-	**Maintenance menu** **Parameters of MAI menu can't be selected for monitoring**	
LIS1	❑ **State of logic inputs LI1 to LI4** Can be used to visualize the state of the 4 logic inputs LI. 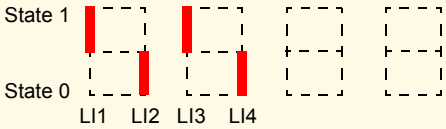 Example above: LI1 and LI3 are at 1; LI2 and LI4 are at 0.	-
LOS1	❑ **State of the logic output LO1 and relay R1** Can be used to visualize the state of the LO. 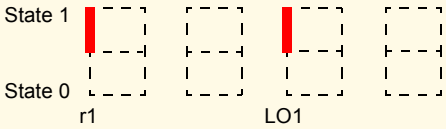 	-
HSU	❑ **Display of high speed value** Display of high speed value. Range Low speed LSP page 44 to Maximum frequency tFr page 55. Visible only if 2 HSP assignment SH2 or 4 HSP assignment SH4 page 76 is configured.	Hz
nCU	❑ **Drive Power rating** Indicates the drive rating. This is part the of the drive reference, see page 10. Possible values: 018 = 0.18 kW (0.25 HP) 037 = 0.37 kW (0.50 HP) 055 = 0.55 kW (0.75 HP) 075 = 0.75 kW (1 HP) U15 = 1.5 kW (2 HP) U22 = 2.2 kW (3 HP) U30 = 3 kW (3 HP) U40 = 4 kW (5 HP)	-
UCAL	❑ **Drive voltage rating** Drive rate supply voltage. This is part the of the drive reference, see page 10. Possible values: F1 = 100-120 V 1 phase in, 200-240 V 3 phase out M2 = 200-240 V 1 phase in, 200-240 V 3 phase out M3 = 200-240 V 3 phase in, 200-240 V 3 phase out	-
SPn	❑ **Specific Product Number** This parameter is used in order to identify the possible specification of the product. Visible only if SPn is different to zero.	-
CISU	❑ **Card 1 Software Version** Application software version. Example: 1105 for 1.1 ie 05. 1 (version, major). 1 (version, minor). 05 (ie, evolution number)	-
C2SU	❑ **Card 2 Software Version** Motor software version. Example: 1105 for 1.1 ie 05. 1 (version, major). 1 (version, minor). 05 (ie, evolution number)	-

Code	Name/Description	Unit
MAI-	**Maintenance menu** (continued)	
rtHI	❑ **Run elapsed time display**	0.01

Total time the motor has been powered up. Range: 0 to 65535 hours. Value displayed is as described in the table below. Parameter resettable by services

Hours	Display
1	0.01
10	0.10
100	1.00
1000	10.0
10000	100

PtH	❑ **Power On time display**	0.01

Total time the drive has been powered on. Range: 0 to 65535 hours. Value displayed is as described in the table above. Parameter resettable by services.

FtH	❑ **Fan time display**	0.01

Range: 0 to 65535 hours. Value displayed is as described in the table above. Parameter resettable by customer.

PEt	❑ **Process elapsed time**	0.01

Range: 0 to 65535 hours. Value displayed is as described in the table above. Parameter resettable by customer.

COMI	❑ **Modbus communication status**	-

- rOt0 ☐ Modbus no reception, no transmission = communication idle
- rOt1 ☐ Modbus no reception, transmission
- rIt0 ☐ Modbus reception, no transmission
- rIt1 ☐ Modbus reception and transmission

dPI	❑ **Last detected fault 1**	-

This parameter describes the last detected fault.

EPI	❑ **State of drive at detected fault 1**	-

This parameter describes the state at the moment of the 1st detected fault.

bit 0	bit 1	bit 2	bit 3	bit 4
ETA.1: Switched on	ETA.5: Quick stop	ETA.6: Switch on disabled	Forced local enabled	ETA.15 : Motor rotation in forward direction (or stopped)

bit 5	bit 6	bit 7	bit 8	bit 9
ETI.4: Run order present	ETI.5: DC injection running	ETI.7: Motor thermal threshold reached	ETI.8: Reserved	ETI.9: Product in acceleration

bit 10	bit 11	bit 12	bit 13 - 14	bit 15
ETI.10 : Product in deceleration	ETI.11 : Current limitation or torque limitation is running	Fast stop in progress	ETI.14= 0 + ETI.13=0 : Drive controlled by terminal or local keypad ETI.14= 0 + ETI.13=1 : Drive controlled by remote keypad ETI.14= 1 + ETI.13=0 : Drive controlled by Modbus ETI.14= 1 + ETI.13=0 : Reserved	ETI.15 : Reverse direction applied to the ramp

Parameter that can be modified during operation or when stopped.

Code	Name/Description	Adjustment range	Factory setting
MAI-	**Maintenance menu** (continued)		
dP2	❑ **Last detected fault 2** This parameter describes the 2nd detected fault.		-
EP2	❑ **State of drive at detected fault 2** This parameter describes the state at the moment of the 2nd detected fault. See EPI.		-
dP3	❑ **Last detected fault 3** This parameter describes the 3rd detected fault.		-
EP3	❑ **State of drive at detected fault 3** This parameter describes the state at the moment of the 3rd detected fault. See EPI		-
dP4	❑ **Last detected fault 4** This parameter describes the 4th detected fault.		-
EP4	❑ **State of drive at detected fault 4** This parameter describes the state at the moment of the 4th detected fault. See EPI		-
COd	❑ **HMI Password** Possible state value: OFF ☐ Code disabled On ☐ Code activated Range 2 to 9999 If you have lost your code, please contact Schneider Electric. This parameter is used to restrict access to the drive. To lock the drive, go to the HMI Password COd parameter, enter a code within the above range. Once activated, the code state changes to On: The protection enables only access to rEF (see page 36) and MOn (see page 37) modes, except when using SoMove. Return to factory settings or access to FULL section are disabled, Download configuration to SoMove is possible, Upload configuration to SoMove is disabled. To unlock the drive, go to the COd parameter, enter the valid code, then press ENT. Code protection removal is then possible and carried out by entering OFF using the jog dial, then press ENT.	2 to 9999	OFF

Configuration Mode ConF

Configuration mode includes 3 parts:

1. MyMenu includes 11 factory set parameters (among them 9 visible by default). Up to 25 parameters are available for user customization using SoMove software.
2. store/recall parameter set: these 2 functions are used to store and recall customer settings.
3. FULL: This menu provides access to all other parameters. It includes 6 sub-menus:
   - Macro-configuration CFG - page 46
   - Input Output menu I_O - page 47
   - Motor control menu drC - page 56
   - Control menu CtL - page 60
   - Function menu FUn - page 62
   - Fault detection management menu FLt - page 77
   - Communication menu COM - page 83.

Organization tree

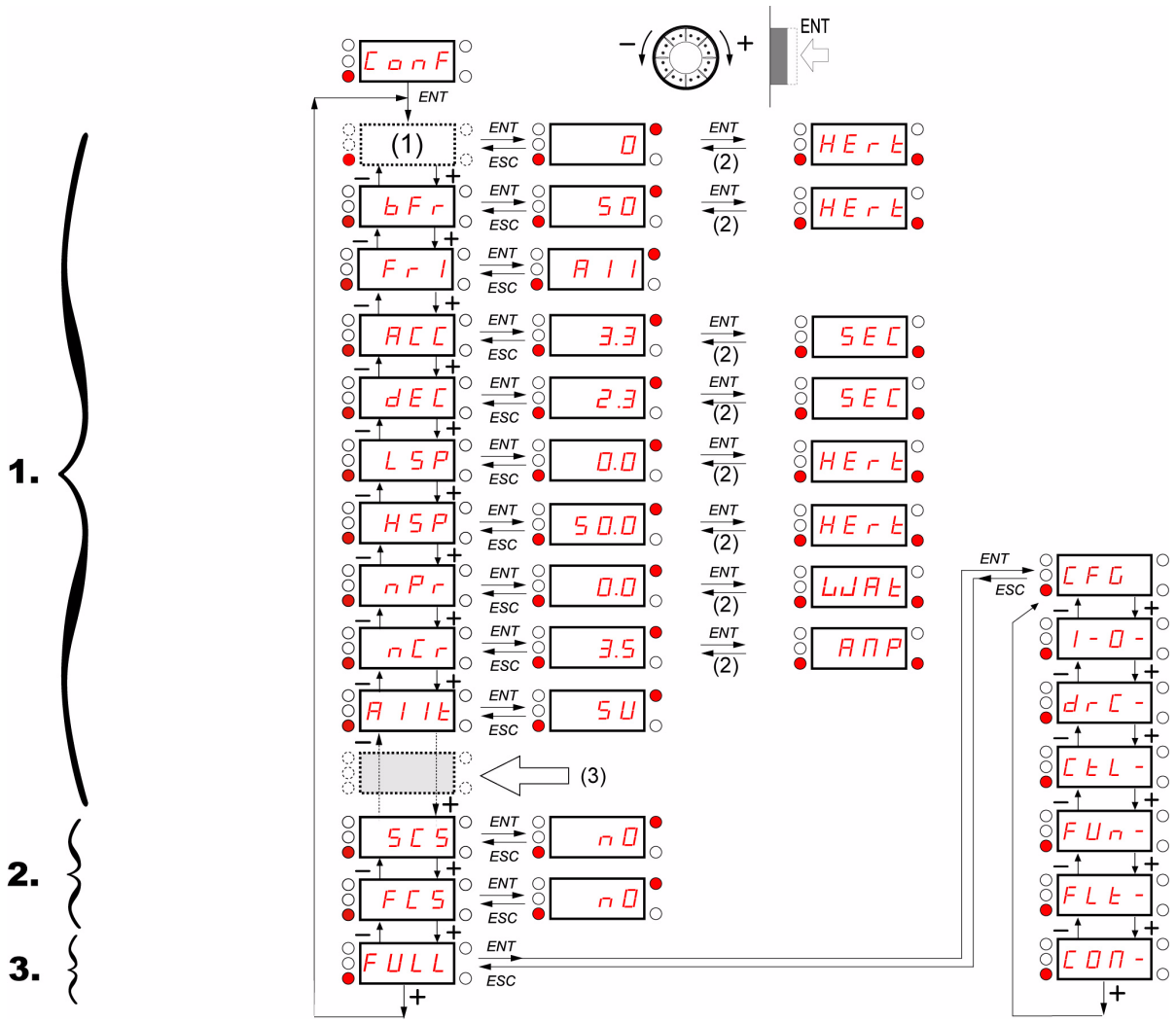

Displayed parameter values are given as examples only

(1) Depending on reference channel active.
Possible values: LFr or AIU1

(2) 2 seconds or ESC.

(3) plus 14 other customizable parameters selectable (in "FULL" list) using SoMove.

Code	Name/Description	Adjustment range	Factory setting
LFr	❑ **External reference value** This parameter allows to modify the frequency reference with the jog dial. External keypad or local force mode configured. Forced local reference FLOC page 61 set to LCC and and Forced local assignment FLO page 61 different to nO. Visibility depends on the drive settings.	-400 Hz to 400 Hz	-
AIU1	❑ **Analog input virtual** This parameter allows to modify the frequency reference when • Forced local reference FLOC page 61 is set to AIU1 • and Forced local assignment FLO page 61 is different to nO. Visible if reference channel active is integrated display (Reference channel 1 Fr1 set to AIU1).	0% to 100%	-
bFr 50 60	❑ **Standard motor frequency** External keypad or local force mode configured (FLOC = LCC) (not visible in the factory setting). ☐ 50 Hz ☐ 60 Hz Set to 50 Hz or 60 Hz, taken from the motor rating plate. Changing bFr sets back parameters: FrS, Fbd and HSP: 50 Hz or 60 Hz ItH is set to nCr nCr according to drive rating nPr Watt or HP nSP according to drive rating tFr 60 Hz or 72 Hz		50 Hz
Fr1 AI1 LCC Mdb AIU1	❑ **Reference channel 1** This parameter allows selection of the reference source. ☐ Terminal ☐ Remote display ☐ Modbus ☐ Integrated display with Jog dial		AI1
ACC	❑ **Acceleration** Acceleration time between 0 Hz and the Rated motor frequency FrS page 55. Make sure that this value is compatible with the inertia being driven.	0.0 s to 999.9 s	3.0 s
dEC	❑ **Deceleration** Time to decelerate from the Rated motor frequency FrS page 55 to 0 Hz. Make sure that this value is compatible with the inertia being driven.	0.0 s to 999.9 s	3.0 s
LSP	❑ **Low speed** Motor frequency at minimum reference If HSP, HSP2, HSP3 and HSP4 are already set then LSP is limited to the minimum of those values.	0 Hz to HSP	0 Hz
HSP	❑ **High speed** Motor frequency at maximum reference. Check that this setting is appropriate for the motor and the application. The values of HSP, HSP2, HSP3 and HSP4 are idependent but each HSP value is linked to the values of Low speed LSP and Maximum frequency tFr page 55 according to the following rules: • HSPx is limited to LSP and tFr (LSP ≤ HSPx ≤ tFr). • If tFr is decreased below the current HSPx value, then HSPx automatically decreases to the new value of tFr. • Once HSP, HSP2, HSP3 and HSP4 are set, LSP is limited to their minimum.	LSP to tFr (Hz)	50 or 60 Hz according to BFr, max TFr

Parameter that can be modified during operation or when stopped.

Code	Name/Description	Adjustment range	Factory setting
nPr	❑ **Rated Motor Power** Visible only if Motor parameter choice nPC page 58 is set to nPr. If nPr is available CoS disappears. Rated motor power given on the nameplate. Motors can range from five ratings lower up to two ratings higher than the drive rating.. Performance is optimized when there is a maximum of one rating difference. If Standard motor frequency bFr page 44 is set to 50Hz, theRated motor power nPr unit will be kW, otherwise it will be HP.	NCV -5 to NCV +2	According to drive rating
SCS nO Str1 2 s	❑ **Store customer parameter set** This function creates a backup of the present configuration: ☐ Function inactive ☐ Saves the current configuration in the drive memory. SCS automatically switches to nO as soon as the save has been performed. When a drive leaves the factory the current configuration and the backup configuration are both initialized with the factory configuration.		nO
FCS nO rECI Ini InI 2 s	❑ **Factory / recall customer parameter set** This function permits to restore a configuration. ☐ Function inactive. FCS automatically changes to nO as soon as one of the following actions has been performed. ☐ The current configuration becomes identical to the backup configuration previously saved by SCS. FCS automatically changes to nO as soon as this action has been performed. rECI is only visible if the backup has been carried out. If this value appears, InI is not visible. ☐ The current configuration becomes identical to the factory setting. If this value appears, InI is not visible. ☐ The current configuration becomes identical to the backup configuration previously defined by SoMove software. If this value appears, Ini and rECI are not visible. **⚠ DANGER** **UNINTENDED EQUIPMENT OPERATION** Check that the modification of the current configuration is compatible with the wiring diagram used. **Failure to follow these instructions will result in death or serious injury.**		nO

2 s To change the assignment of this parameter press the “ENT” key for 2 s.

How to control the drive locally

In factory settings "RUN", "STOP" and the jog dial are inactive. To control the drive locally, adjust the following parameter:
set Reference channel 1 Fr1 page 44 to AIU1 (Integrated display with jog dial).

LI assignment information

It is possible with ATV12 to use multi assignment function (ie: AC2 and rrS on the same LI).
It is also possible on some functions to assign LIH (high) or LII (low), which means that the assigned function will be activated to high (LIH) or low level (LII) of LI.

Code	Name/Description	Adjustment range	Factory setting
CFG	❑ **Macro-configuration**		StS

⚠ DANGER

UNINTENDED EQUIPMENT OPERATION
Check that the selected macro configuration is compatible with the wiring diagram used.

Failure to follow these instructions will result in death or serious injury.

Macro configuration provides a shortcut to configure a set of parameters suited to a specific field of application.
3 macro configurations are available:

- StS ☐ Start/stop. Only forward is assigned
- PId ☐ PID regulation. Activate PID function, dedicated AI1 for feedback and AIV1 for reference.
- SPd ☐ Speed. Allocate LI to preset speed (same allocation as ATV11) which provides a means of speeding up the configuration of functions for a specific field of application.

2 s

Selecting a macro configuration assigns the parameters in this macro configuration.
Each macro configuration can still be modified in the other menus.

Input / output or parameter	Start / Stop	PID regulation	Speed
AI1	Ref. channel 1	PID feedback	No
AIV1	No	Reference channel 1	
AO1	No		
LO1	No		
R1	No drive detected fault		
L1h (2-wire)	Forward		
L2h (2-wire)	No		Reverse
L3h (2-wire)	No	Auto/Manu	2 preset speeds
L4h (2-wire)	No		4 preset speeds
L1h (3-wire)	Stop		
L2h (3-wire)	Forward		
L3h (3-wire)	No		Reverse
L4h (3-wire)	No	Auto / Manu	2 preset speeds
Fr1 (Reference channel 1)		AIU1	AIU1
CtT (Motor control type)		PUMP	
rIn (Reverse inhibition)		YES	
AI1t (AI1t type)		OA	
LFL1 (4-20 mA loss)		YES	
SP2 (Preset speed 2)			10.0
SP3 (Preset speed 3)			25.0
SP4 (Preset speed 4)			50.0
MPC (Motor parameter choice)			COS
AdC (Automatic DC injection)	YES	YES	YES

2 s To change the assignment of this parameter press the “ENT” key for 2 s.

Code	Name/Description	Adjustment range	Factory setting
I-O-	**Input Output menu**		
tCC	❑ **Type of control**		2C
2C	☐ 2-wire control (see page 50) The open or closed state of the input controls the running or stopping. Example of "source" wiring: 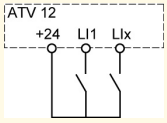 LI1: forward LIx: reverse		
2 s			
3C	☐ 3-wire control (see page 50) "forward" or "reverse" pulse is sufficient to command starting, a "stop" pulse is sufficient to command stopping Example of "source" wiring: 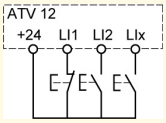 LI1: stop LI2: forward LIx: reverse		

⚠ DANGER

UNINTENDED EQUIPMENT OPERATION

The following function will be returned to factory settings: 2 wire type control tCt page 50 as will all functions which assign logic inputs.
The macro configuration selected will also be reset it if has been customized (loss of custom settings).
Check that this change is compatible with the wiring diagram used.

Failure to follow these instructions will result in death or serious injury.

2 s To change the assignment of this parameter press the “ENT” key for 2 s.

2 wire control diagrams (see page 50)

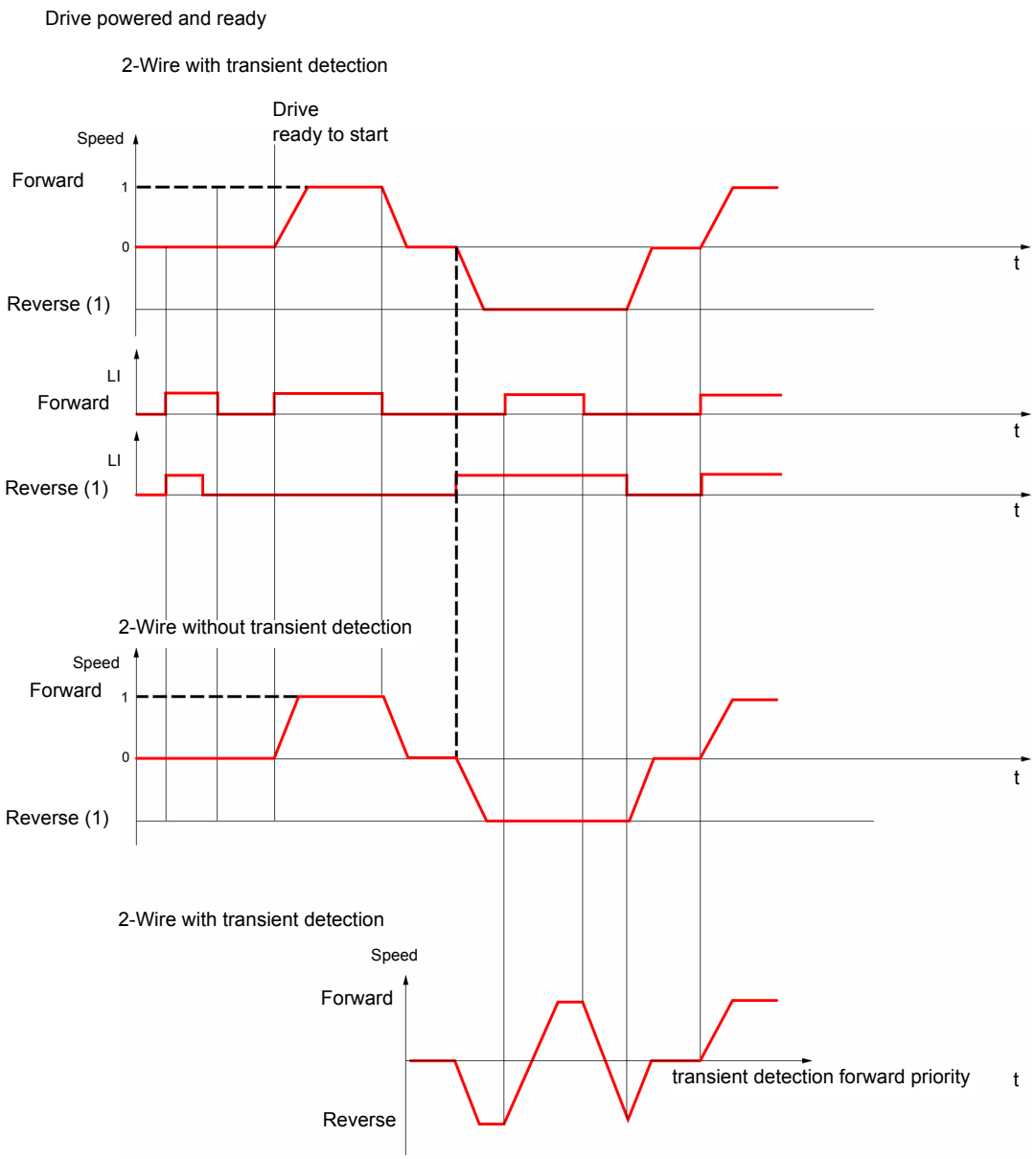

(1) Reverse is not factory assigned. See Reverse direction rrS page 64.

Forward and Reverse realised in same time provides motor starting in Forward direction.

3-wire control diagram (see page 50)

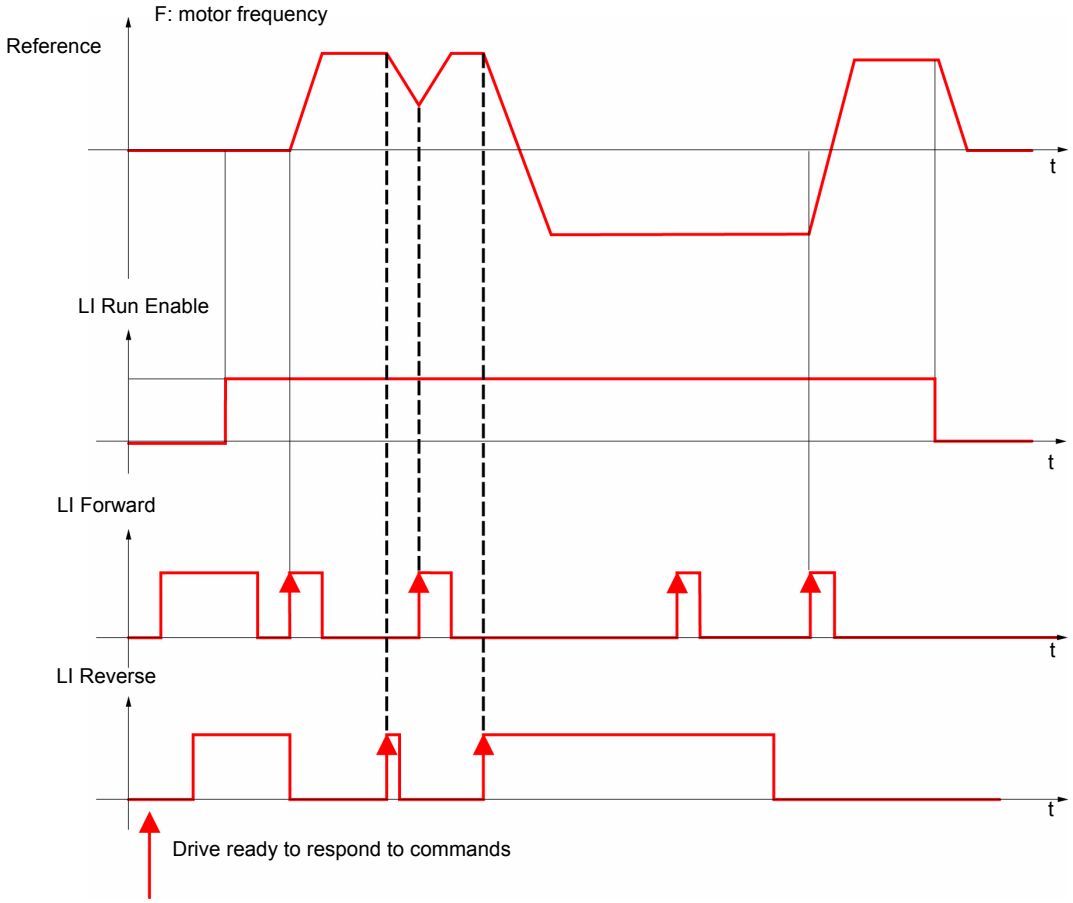

Code	Name/Description	Adjustment range	Factory setting
I-O-	**Input Output menu** (continued)		
tCt	❑ **2 wire type control**		trn

⚠ DANGER

UNINTENDED EQUIPMENT OPERATION
Check that the modification of the 2 wire type control is compatible with the wiring diagram used.

Failure to follow these instructions will result in death or serious injury.

2-wire type control parameter can only be accessed if Type of control tCC page 47 is set to 2C.

- LEL ☐ Level: State 0 or 1 is taken into account for run or stop.
- trn ☐ Transition: A change of state (transition or edge) is necessary to initiate operation, to help prevent accidental restarts after a power supply interruption.
- PFO ☐ Priority FW: State 0 or 1 is taken into account for run or stop, but the "forward" input takes priority over the "reverse" input.

nPL	❑ **Logic inputs type**		POS

- POS ☐ Positive: the inputs are active (state 1) at a voltage equal to or higher than 11 V (for example +24 V terminal). They are inactive (state 0) when the drive is disconnected or at a voltage lower than 5 V.
- nEG ☐ Negative: the inputs are active (state 1) at a voltage lower than 10 V (for example COM terminal). They are inactive (state 0) at a voltage equal to or higher than 16 V or when the drive is disconnected.

See Control connection diagrams, page 24.

Code	Name/Description	Adjustment range	Factory setting
I-O-	**Input Output menu** (continued)		
AI1-	**AI1 configuration menu**		
AI1t	❑ **AI1 type** This function makes interface from the analog input signal to a drive internal value. ☐ Voltage: 0-5 Vdc (5U) ☐ Voltage: 0-10 Vdc (10U) ☐ Current: x-y mA. Range determined by the AI1 current scaling parameter of 0% CrL1 and AI1 current scaling parameter of 100% CrH1 settings below, see page 51.		5U
CrL1	❑ **AI1 current scaling parameter of 0%** Visible only if AI1 type AI1t is set to 0A	0 to 20 mA	4 mA
CrH1	❑ **AI1 current scaling parameter of 100%** Visible only if AI1 type AI1t is set to 0A	0 to 20 mA	20 mA
I-O-	**Input Output menu** (continued)		
r1	❑ **R1 assignment** ☐ Not assigned (nO) ☐ No error detected (FLt) ☐ Drive run (rUn) ☐ Frequency threshold reached (FtA) ☐ HSP reached (FLA) ☐ I threshold reached (CtA) ☐ Frequency reference reached (SrA) ☐ Motor thermal reached (tSA) ☐ Underload alarm (ULA) ☐ Overload alarm (OLA) ☐ AI1 AI. 4-20 - Visible only if AI1t is set to 0A (see above) (AP1)		FLt

Code	Name/Description	Adjustment range	Factory setting
I-O-	**Input Output menu** (continued)		
LO1-	**LO1 Configuration menu (LO1-)**		
LO1	❑ **LO1 assignment** Allows to adapt the logic output to the application need Same values as r1. See previous page.		nO
LO1S POS nEG	❑ **LO1 status (output active level)** ☐ Positive : hight activation level ☐ Negative : low activation level		POS
I-O-	**Input Output menu** (continued)		
tOL	❑ **Application Overload time delay** This function can be used to stop the motor in the event of an application overload. This is not a motor or drive thermal overload. If the motor current exceeds the Application Overload threshold LOC, an Application Overload time delay tOL is activated. Once this time delay tOL has elapsed, if the current is still greater than the overload threshold LOC -10%, the drive will stop running and display OLC Process overload. Overload detection is only active when the system is in steady state (speed reference reached). A value of 0 will disable application overload detection. 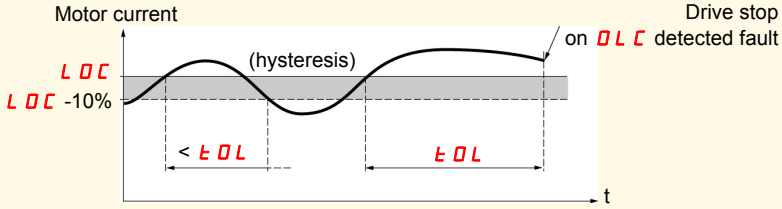 	0 to 100 s	0 s
LOC ( )	❑ **Application Overload threshold** Visible only if Application Overload time delay tOL above is not set to 0. This parameter is used to detect an "application overload". LOC can be adjusted between 70 and 150% of the nominal drive current. This is not a motor or drive thermal overload.	70 to 150% of nCr	90% of of nCr

( ) Parameter that can be modified during operation or when stopped.

Code	Name/Description	Adjustment range	Factory setting
I-O-	**Input Output menu** (continued)		
ULt	❑ **Application underload time delay**	0 to 100 s	0 s
	ULt can be adjusted between 0 and 100 s. If the motor current undershoots the underload threshold LUL for longer than the adjustable time delay ULt, the drive will stop running and display ULF (Process underload fault) page 96. 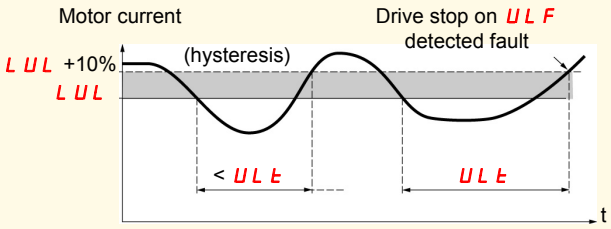 Underload detection is only active when the system is in steady state (speed reference reached). A value of 0 will disable application underload detection.		
LUL ↻	❑ **Application Underload threshold**	20 to 100% of nCr	60%
	Visible only if Application underload time delay ULt is not set to 0. This parameter is used to detect an application underload condition on the motor. Application Underload threshold LUL can be adjusted between 20 and 100% of the nominal drive current		
FtA ↻	❑ **Motor frequency threshold**	0 to 400 Hz	50 or 60 Hz According to drive rating
	Visible only if R1 assignment r1 page 51 or a LO1 assignment LO1 page 52 is set to FtA.		
CtA ↻	❑ **Motor current threshold**	0 to 1.5 In (1)	InV
	Visible only if R1 assignment r1 page 51 or a LO1 assignment LO1 page 52 is set to CtA.		
ttA ↻	❑ **Motor thermal state threshold**	0 to 118% of tHr	100%
	Visible only if R1 assignment r1 page 51 is set to tSA. Trip threshold for motor thermal alarm (logic output or relay)		

(1) In = nominal drive current

↻ Parameter that can be modified during operation or when stopped.

Code	Name/Description	Adjustment range	Factory setting
I-O-	**Input Output menu** (continued)		
AO1-	**AO1 configuration menu**		
AO1	❑ **AO1 assignment** This parameter is used to set the value of an analog output. nO ☐ Not assigned OCr ☐ Motor current OFr ☐ Output frequency OrP ☐ Ramp output OPS ☐ PID reference - Visible only if PID feedback assignment PIF page 70 is not set to nO OPF ☐ PID feedback - Visible only if PID feedback assignment PIF page 70 is not set to nO OPE ☐ PID error - Visible only if PID feedback assignment PIF page 70 is not set to nO OPr ☐ Output power tHr ☐ Motor thermal state tHd ☐ Drive thermal state		nO
AO1t	❑ **AO1 type** This parameter provides the interface between the drive internal value and an analog output signal. 10U ☐ Voltage: 0-10 Vdc 0A ☐ Current: 0-20 mA 4A ☐ Current: 4-20 mA		0A

Code	Name/Description	Adjustment range	Factory setting
drC-	**Motor control menu**		
bFr	❑ **Standard motor frequency** See page 44.		50 Hz
nPr	❑ **Rated motor power** See page 45.	NCV -5 to NCV +2	According to drive rating
CoS	❑ **Rated motor cos phi** Visible only if Motor parameter choice MPC page 58 is set to CoS. If Rated motor cos phi CoS is available Rated motor power nPr disappears. Motor nameplate power factor (pf). **Note:** Do not confuse this with motor "Service Factor". Setting CoS to or very near to 1 may result in unsatisfactory motor operation. If the motor power factor is not indicated on the nameplate, leave this parameter at the factory default (approximately 0.80)	0.5 to 1	According to drive rating
UnS	❑ **Rated motor voltage** Rated motor voltage given on the nameplate. If the line voltage is less than the rated motor voltage, Rated motor voltage UnS should be set to the value of the line voltage applied to the drive terminals.	100 to 480 V	230 V
nCr	❑ **Rated motor current** Rated motor current given on the nameplate. Rated motor current nCr modifies Motor thermal current ItH page 80.	0.25 In to 1.5 In (1)	According to drive rating
FrS	❑ **Rated motor frequency** Rated motor frequency given on the nameplate. The factory setting is 50 Hz, or preset to 60 Hz if Standard motor frequency bFr page 44 is set to 60 Hz.	10 to 400 Hz	50 Hz
nSP	❑ **Rated motor speed** Rated motor speed given on the nameplate.	0 to 24000 rpM	According to drive rating
tFr	❑ **Maximum frequency** Maximum frequency tFr gives the upper value possible for High speed HSP page 76. The factory setting is 60 Hz, or preset to 72 Hz if Standard motor frequency bFr page 55 is set to 60 Hz.	10 to 400 Hz	60 Hz
Ctt	❑ **Motor control type** Allows selection of the motor control type suitable for the application and the required performances. PErF ☐ Performance: SVCU; Sensorless vector control with internal speed loop based on voltage feedback calculation. For applications needing high performance during starting or operation. Std ☐ Standard: U/F 2 points (Volts/Hz) without internal speed loop For simple applications that do not require high performance. Simple motor control law keeping a constant Voltage Frequency ratio, with a possible adjustment of the curve bottom. This law is generally used for motors connected in paralell. Some specific applications with motors in paralell and high performance levels may require PErF. PUMP ☐ Pump: U²/F; dedicated to variable torque pump and fan applications that do not require high starting torque.		Std

(1) In = nominal drive current

Code	Name/Description	Adjustment range	Factory setting
drC-	**Motor control menu** (continued)		
UFr	❑ **IR compensation (law U/F)**	25 to 200%	100%
	Used to optimize torque at very low speed, or to adapt to special cases (for example: for motors connected in parallel, decrease IR compensation (law U/F) UFr). If there is insufficient torque at low speed, increase IR compensation (law U/F) UFr. Too high a value can cause the motor not to start (locking) or a change to current limiting mode.		
SLP	❑ **Slip compensation**	0 to 150%	100%
	Visible only if Motor control type CtT page 55 is not set to PUMP Used to adjust the slip compensation around the value set by the nominal motor slip, or to adapt to special cases (example: for motors connected in parallel, decrease Slip compensation SLP). If the set slip compensation is lower than the actual slip compensation, the motor doesn't run at nominal speed at steady state but at a speed lower than the reference. If the set slip compensation is greater than the actual slip compensation, motor speed is unstable.		
StA	❑ **Frequency loop stability**	0 to 100%	20%
	The StA parameter can be used to reduce overshoots and oscillations at the end of acceleration. After a period of acceleration or deceleration, StA adapts the return to a steady state to the dynamics of the machine; Too high a value causes an extended response time. Too low a value causes an overspeed, or even instability. Low StA In this case, increase StA 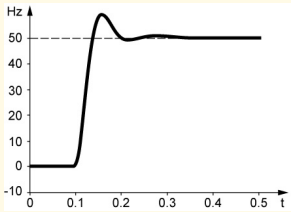 Correct StA 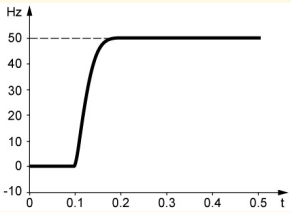 High StA In this case, reduce StA 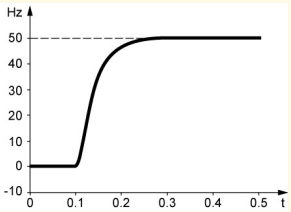 Visible only if Motor control type CtT page 55 is set to PErF.		
FLG	❑ **Frequency loop gain**	0 to 100%	20%
	The FLG parameter adjusts the slope of the speed increase according to the inertia of the machine being driven. Too high a value causes an overspeed, or even instability. Too low a value causes an extended response time Low FLG In this case, increase FLG 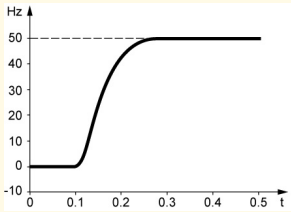 Correct FLG 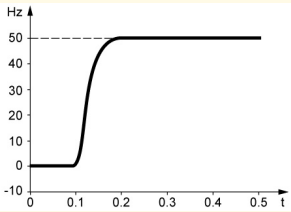 High FLG In this case, reduce FLG 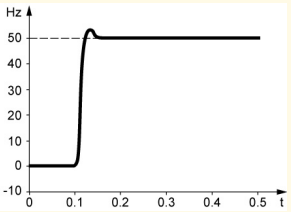 Visible only if Motor control type CtT page 55 is set to PErF.		

Parameter that can be modified during operation or when stopped.

Code	Name/Description	Adjustment range	Factory setting
drC-	**Motor control menu** (continued)		
PFL	❑ **Flux Profile**	0 to 100%	20%

It defines the magnetizing current at zero frequency, as a % of the rated magnetizing current
Adjustment of PUMP law.

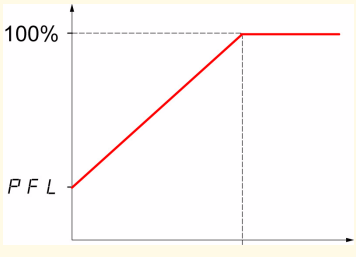

Visible only if Motor control type CtL page 55 is set to PUMP

SFr	❑ **Switching frequency**	2 to 16 kHz	4 kHz

Switching frequency setting.
In the event of overheating, the drive automatically decreases the switching frequency.
It is restored to its original value when the temperature returns to normal.

CAUTION

RISK OF DAMAGE TO THE DRIVE
On ATV12●●●●M2 ratings, if the filters are disconnected, the drive's switching frequency must not exceed 4 kHz.

Failure to follow these instructions can result in equipment damage.

SFt	❑ **Switching frequency type**	HF1

The motor switching frequency will always be modified (reduced) when the internal temperature of the drive is too high.

- HF1: Heating optimization. (HF1)
  Allows the system to adapt the switching frequency according to the motor frequency.
- HF2: Motor noise optimization (for high switching fequency). (HF2)
  Allows system to keep a constant choosen switching frequency (SFr) whatever the motor frequency (rFr).

In the event of overheating, the drive automatically decreases the switching frequency.
It is restored to its original value when the temperature returns to normal.

nrd	❑ **Motor noise reduction**	nO

Noise means audible noise. Depending on the environment it must be possible to adjust the motor noise.
Random frequency modulation avoids possible resonance noises that can occur at fixed frequency.

- No (nO)
- Yes (YES)

Parameter that can be modified during operation or when stopped.

Code	Name/Description	Adjustment range	Factory setting
drC-	**Motor control menu** (continued)		
tUn	❑ **Auto-tuning**		nO

⚠⚠ DANGER

HAZARD OF ELECTRIC SHOCK OR ARC FLASH
- During auto-tuning, the motor operates at rated current.
- Do not service the motor during auto-tuning.

Failure to follow these instructions will result in death or serious injury.

⚠ WARNING

LOSS OF CONTROL
The following parameters, described on page 55, must be correctly configured before starting auto-tuning: UnS, FrS, nCr, nSP and nPr or CoS.
If one or more of these parameters is modified after auto-tuning has been performed, tUn will return to nO and the procedure must be repeated.

Failure to follow these instructions can result in death, serious injury, or equipment damage.

nO	☐ No: When factory parameters of standard motors
YES	☐ Yes: Launches auto-tuning
dOnE	☐ Done: If auto-tuning has already been performed

Attention:
- Auto-tuning must be performed with the motor connected and cold.
- Parameters Rated Motor Power nPr page 45 and Rated motor current nCr page 55 must be consistent.
- Auto-tuning is performed only if no stop command has been activated. If a freewheel stop or fast stop function has been assigned to a logic input, this input must be set to 1 (active at 0).
- Auto-tuning takes priority over any run or prefluxing commands, which will take effect after the auto-tuning sequence.
- Auto-tuning may last for 1 to 2 seconds. Do not interrupt, wait for the display to change to dOnE or nO.

☞ **Note:** During auto-tuning the motor operates at rated current.

MPC	❑ **Motor parameter choice**		nPr

This parameter allows to choose which motor parameter will be configured (nPr or CoS).

nPr	☐ Rated Motor Power nPr page 45
COS	☐ Rated motor cos phi CoS page 55

Control menu

Control channel diagram

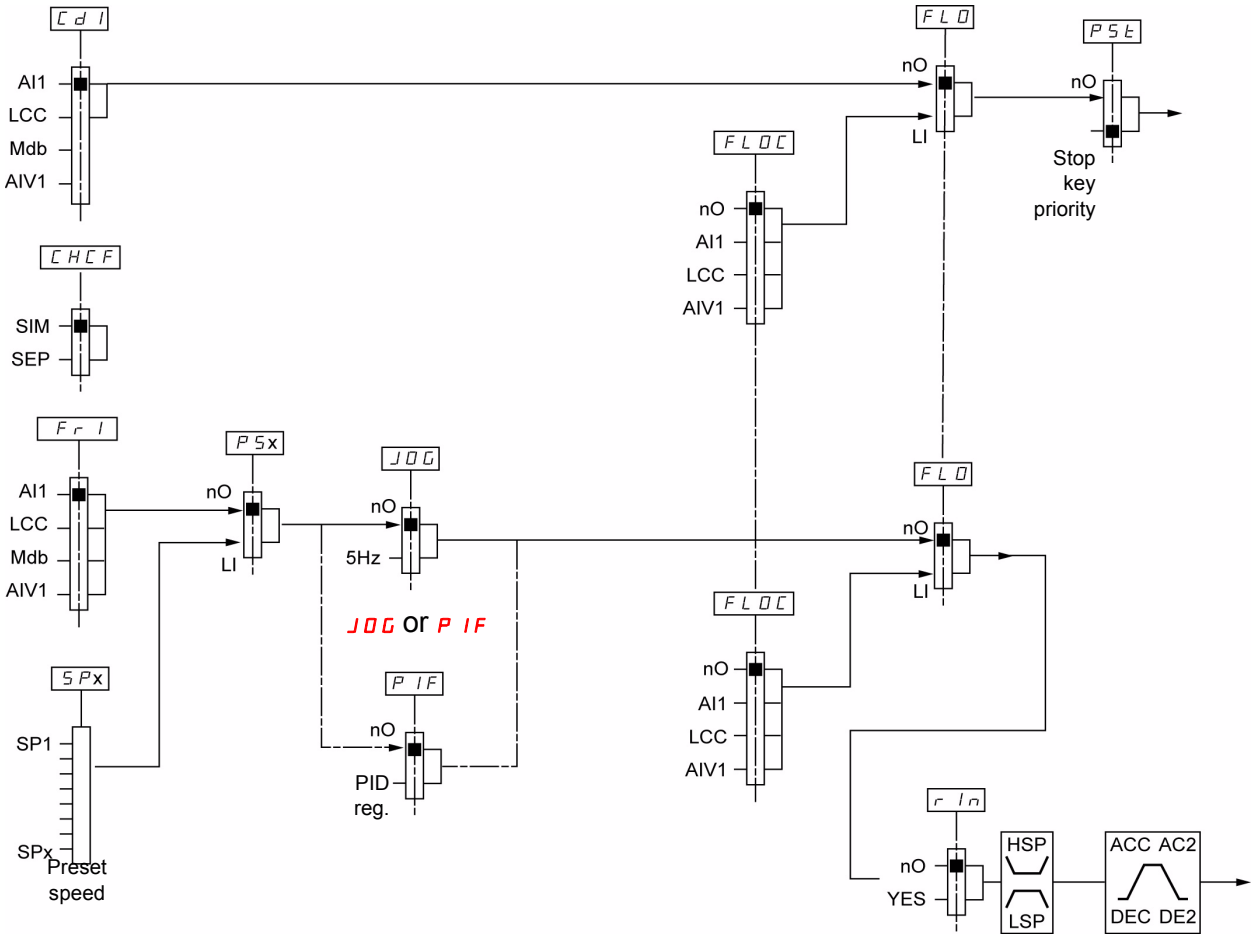

Code	Name/Description	Adjustment range	Factory setting
CtL-	**Control menu**		
Fr1	❑ **Reference channel 1** ☐ Terminal ☐ Remote display ☐ Modbus ☐ Integrated display with Jog dial This parameter is already included in "my menu" section, page 44.		AI1
LFr	❑ **External reference value** This parameter is already included in "my menu" section, page 44.	-400 Hz to 400 Hz	-
AIU1	❑ **Analog input virtual** This parameter is already included in "my menu" section, page 44.	0% to 100%	
rIn nO YES	❑ **Reverse inhibition** Inhibition of movement in reverse direction, does not apply to direction requests sent by logic inputs. - Reverse direction requests sent by logic inputs are taken into account. - Reverse direction requests sent by the display are not taken into account. - Reverse direction requests sent by the line are not taken into account. - Any reverse speed reference originating from the PID, etc., is interpreted as a zero reference (0 Hz). ☐ No ☐ Yes		nO
PSt 2 s nO YES	❑ **Stop key priority** This parameter can enable or disable the stop button located on the drive and remote display. Disabling the stop button is effective if the active command channel is different from the drive keypad or remote display **⚠ WARNING** **LOSS OF CONTROL** Do not select "nO" unless exterior stopping method(s) exist. **Failure to follow these instructions can result in death, serious injury, or equipment damage.** ☐ No: Stop inactive ☐ Yes: Stop active It is advised in case this function is set to YES to use the front door cover or the option display cover on "run" and "stop" keys.		YES
CHCF SIM SEP	❑ **Channel configuration** Channel configuration CHCF allows the selection of: - Not separate mode, (command and reference come from the same channel) - Separate mode (command and reference come from different channel) ☐ Not separate mode ☐ Separate mode		SIM

2 s To change the assignment of this parameter press the “ENT” key for 2 s.

Parameter that can be modified during operation or when stopped.

Code	Name/Description	Adjustment range	Factory setting
CtL-	**Control menu** (continued)		
Cd1 tEr LOC LCC Mdb	❑ **Command channel 1** This parameter allows selection of the command channel. ☐ Terminals ☐ Local ☐ Remote display ☐ Modbus This parameter is available if Channel configuration CHCF page 60 is set to Separate		tEr
FLO nO L1H - L4H	❑ **Forced local assignment** ☐ Function inactive ☐ L1h to L4h: Forced local mode is active when the input is at state 1.		nO
FLOC nO AI1 LCC AIU1	❑ **Forced local reference** Visible only if Forced local assignment FLO is not set to nO. ☐ Not assigned ☐ Terminal ☐ Remote display ☐ Integrated display with jog dial		nO

Code	Name/Description	Adjustment range	Factory setting
FUn-	**Function menu**		
rPt-	**Ramp menu**		
ACC	❑ **Acceleration** Acceleration time between 0 Hz and the Rated motor frequency FrS page 55. Make sure that this value is compatible with the inertia being driven.	0.0 s to 999.9 s	3.0 s
dEC	❑ **Deceleration** Time to decelerate from the Rated motor frequency FrS page 55 to 0 Hz Make sure that this value is compatible with the inertia being driven.	0.0 s to 999.9 s	3.0 s
rPt LIn S U	❑ **Ramp shape assignment** ☐ Linear ☐ S shape ☐ U shape S shape 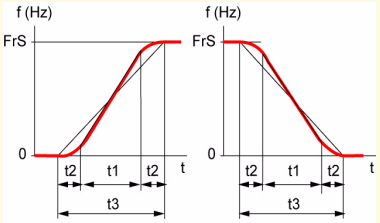 The rounding coefficient is fixed, t1 = 0.6 set ramp time (linear) t2 = 0.4 set ramp time (round) t3 = 1.4 set ramp time U shape 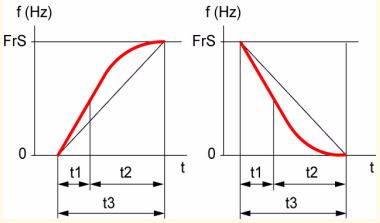 The rounding coefficient is fixed, t1 = 0.5 set ramp time (linear) t2 = set ramp time (round) t3 = 1.5 set ramp time		Lin
rPS nO L1H L2H L3H L4H L1L L2L L3L L4L	❑ **Ramp switching commutation** ☐ Not assigned ☐ L1H: LI1 active High ☐ L2H: LI2 active High ☐ L3H: LI3 active High ☐ L4H: LI4 active High ☐ L1L: LI1 active low ☐ L2L: LI2 active low ☐ L3L: LI3 active low ☐ L4L: LI4 active low See LI assignment information on page 45.		nO

Parameter that can be modified during operation or when stopped.

Code	Name/Description	Adjustment range	Factory setting
FUn-	**Function menu** (continued)		
rPt-	**Ramp menu** (continued)		
AC2	❑ **Acceleration 2** Visible only if Ramp switching commutation rPS page 62 is not set to nO. Second acceleration ramp time, adjustable from 0.0 to 999.9 s This ramp will be the active ramp when using PID for the start and wake-up phases only, see PID wake up level page 73.	0.0 to 999.9 s	5.0 s
dE2	❑ **Deceleration 2** Visible only if Ramp switching commutation rPS page 62 is not set to nO. Second deceleration ramp time, adjustable from 0.0 to 999.9 s	0.0 to 999.9 s	5.0 s
brA	❑ **Decel Ramp Adaptation assignment**		YES
nO	☐ Function inactive. The drive will decelerate based on the normal deceleration adjustment. This setting is compatible with optional dynamic braking if used.		
YES	☐ This function automatically increases deceleration time when stopping or reducing the speed of high inertia loads to help prevent DC bus overvoltage or overbraking.		
dYnA	☐ Motor Braking: This mode allows the drive to attempt the most rapid stop possible without the use of a dynamic brake resistor. It uses motor losses to dissipate energy from regeneration. This function may be incompatible with positioning. This function should not be used when an optional braking resistor and module are being used. **Attention: When using a braking resistor set brA to nO.**		

Parameter that can be modified during operation or when stopped.

Code	Name/Description	Adjustment range	Factory setting
FUn-	**Function menu** (continued)		
Stt-	**Stop configuration menu**		
Stt	❑ **Type of stop** Stop mode on disappearance of the run command and appearance of a stop command rMP ☐ Ramp stop FSt ☐ Fast stop nSt ☐ Freewheel		rMP
nSt	❑ **Freewheel stop assignment** The stop is activated when the input or the bit changes to 0. If the input returns to state 1 and the run command is still active, the motor will only restart if Type of control tCC page 47 = 2C and 2 wire type control tCt page 50 = LEL or PFO. If not, a new run command must be sent. nO ☐ Not assigned L1L ☐ L1L: LI1 Active Low to stop L2L ☐ L2L: LI2 Active Low to stop L3L ☐ L3L: LI3 Active Low to stop L4L ☐ L4L: LI4 Active Low to stop		nO
FSt	❑ **Fast stop assignment** nO ☐ Not assigned L1L ☐ L1L: LI1 Active Low to stop L2L ☐ L2L: LI2 Active Low to stop L3L ☐ L3L: LI3 Active Low to stop L4L ☐ L4L: LI4 Active Low to stop		nO
dCF ( )	❑ **Ramp divider** Visible only if Fast stop assignment FSt page 61 is not set to nO or if FSt is set to Type of stop Stt page 64. The ramp that is enabled (Deceleration dEC page 44 or Deceleration 2 dE2 page 63) is then divided by this coefficient when stop requests are sent. Value 10 corresponds to a minimum ramp time.	1 to 10	4

Code	Name/Description	Adjustment range	Factory setting
FUn-	**Function menu** (continued)		
rrS	❑ **Reverse direction** LI1 to LI4: choice of the input assigned to the reverse command nO ☐ Function inactive L1H ☐ L1h: L1 active high L2H ☐ L2h: L2 active high L3H ☐ L3h: L3 active high L4H ☐ L4h: L4 active high		nO

( ) Parameter that can be modified during operation or when stopped.

Code	Name/Description	Adjustment range	Factory setting
FUn-	**Function menu** (continued)		
AdC-	**Auto DC injection menu**		
AdC nO YES Ct	❑ **Automatic DC injection** ☐ Function inactive, no DC injected current. ☐ Time limited DC injection ☐ Continuous DC injection		YES
SdC1	❑ **Automatic DC injection current** Visible only if Automatic DC injection AdC is not set to nO. Injection current on stopping and continuous DC injection.	0 to 120% of nCr	70%
tdC1	❑ **Automatic DC injection time** Visible only if Automatic DC injection AdC is not set to nO. Injection time on stopping.	0.1 to 30 s	0.5 s

Parameter that can be modified during operation or when stopped.

Code	Name/Description	Adjustment range	Factory setting
FUn-	**Function menu** (continued)		
JOG	❑ **Jog assignment**		nO

This parameter provides step by step control of motor running, using a logic input associated with a 2 and 3-wire control logic input. The jog frequency is fixed at 5 Hz. Acceleration and decelaration ramps taken into account in the Jog function are 0.1 s.

- nO ☐ Function inactive.
- L1H ☐ L1h: LI1 active high
- L2H ☐ L2h: LI2 active high
- L3H ☐ L3h: LI2 active high
- L4H ☐ L4h: LI4 active high

2-wire control

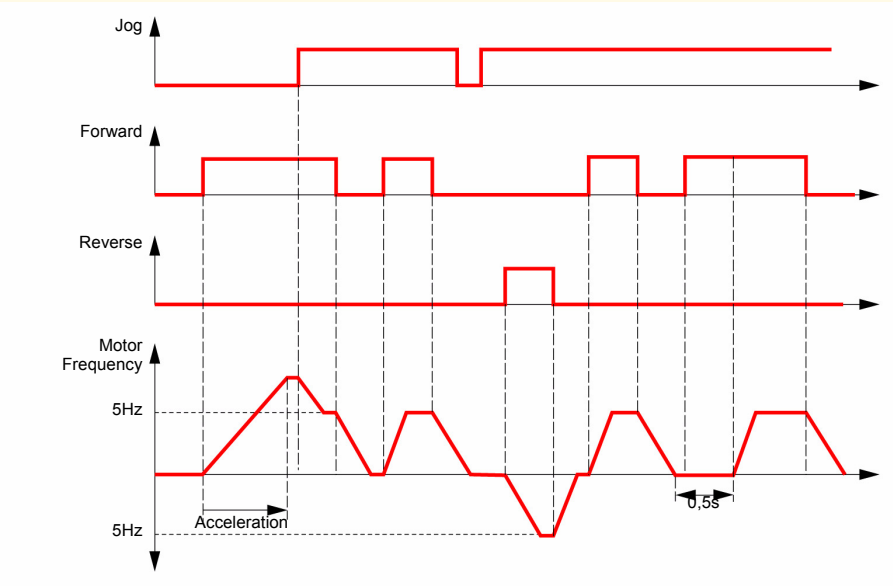

3 wire control

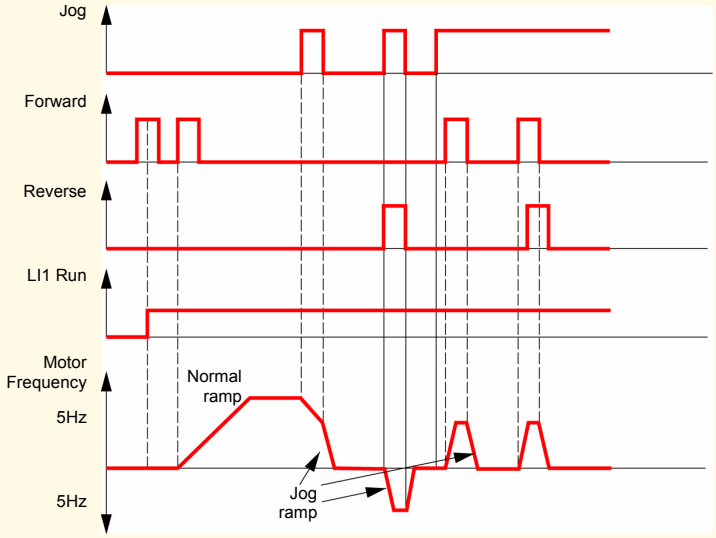

Preset speeds

2, 4, or 8 speeds can be preset, requiring 1, 2 or 3 logic inputs respectively

Combination table for preset speed inputs

8 speeds LI (PS8)	4 speeds LI (PS4)	2 speeds LI (PS2)	Speed reference
0	0	0	Reference
0	0	1	SP2
0	1	0	SP3
0	1	1	SP4
1	0	0	SP5
1	0	1	SP6
1	1	0	SP7
1	1	1	SP8

Code	Name/Description	Adjustment range	Factory setting
FUn-	**Function menu** (continued)		
PSS-	**Preset speed menu**		
PS2 nO L1H L2H L3H L4H	❑ **2 Preset speeds** ☐ Function inactive ☐ L1h: LI1 active high ☐ L2h: LI2 active high ☐ L3h: LI2 active high ☐ L4h: LI4 active high		nO
PS4	❑ **4 Preset speeds** as PS2		nO
PS8	❑ **8 Preset speeds** as PS2		nO
SP2	❑ **Preset speed 2** Visible only if 2 Preset speeds PS2 is not set to nO.	0 to 400 Hz	10 Hz
SP3	❑ **Preset speed 3** Visible only if 4 Preset speeds PS4 is not set to nO.	0 to 400 Hz	15 Hz
SP4	❑ **Preset speed 4** Visible only if 2 Preset speeds PS2 and 4 Preset speeds PS4 are not set to nO.	0 to 400 Hz	20 Hz
SP5	❑ **Preset speed 5** Visible only if 8 Preset speeds PS8 is not set to nO.	0 to 400 Hz	25 Hz
SP6	❑ **Preset speed 6** Visible only if 2 Preset speeds PS2 and 8 Preset speeds PS8 are not set to nO.	0 to 400 Hz	30 Hz
SP7	❑ **Preset speed 7** Visible only if 4 Preset speeds PS4 and 8 Preset speeds PS8 are not set to nO.	0 to 400 Hz	35 Hz
SP8	❑ **Preset speed 8** Visible only if 2 Preset speeds PS2, 4 Preset speeds PS4 and 8 Preset speeds PS8 are not set to nO.	0 to 400 Hz	40 Hz
JPF	❑ **Skip frequency** ☐ This parameter prevents prolonged operation within an adjustable range around the regulated frequency. This function can be used to prevent a critical speed, which would cause resonance, being reached. Setting the function to 0 renders it inactive.	0 to 400 Hz	0 Hz

Parameter that can be modified during operation or when stopped.

PID diagram

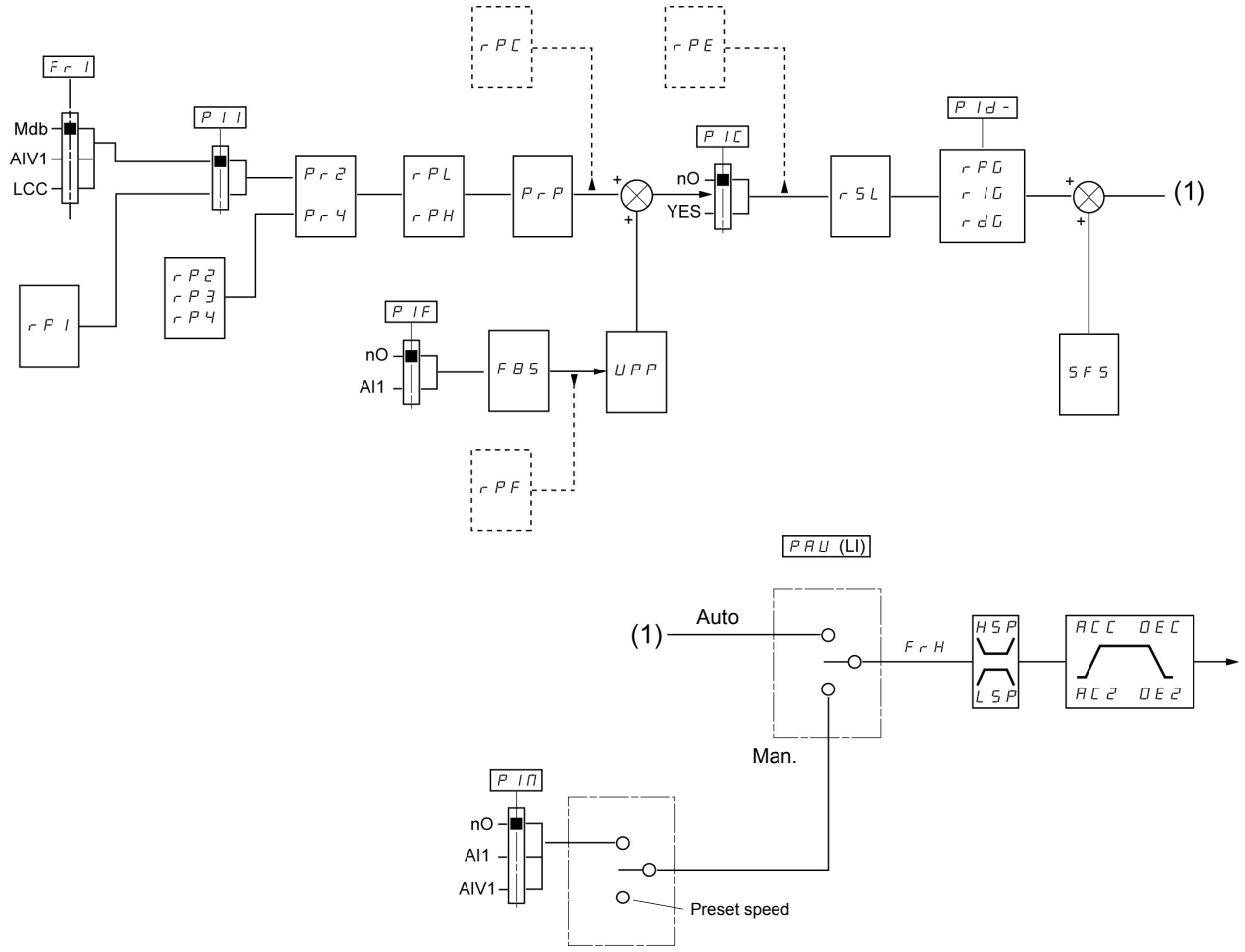
Fr1
Mdb
AIV1
LCC
rP1
PI1
rP2
rP3
rP4
Pr2
Pr4
rPL
rPH
PrP
rPC
rPE
PIC
nO
YES
rSL
PId-
rPG
rIG
rdG
(1)
SFS
PIF
nO
AI1
FBS
UPP
rPF

PAU (LI)
(1)
Auto
Man.
FrH
HSP
LSP
ACC
DEC
AC2
DE2
PIM
nO
AI1
AIV1
Preset speed

Code	Name/Description	Adjustment range	Factory setting
FUn-	**Function menu** (continued)		
PId-	**PID menu**		
PIF nO AI1	❑ **PID feedback assignment** ☐ Not assigned ☐ Terminal. Choice not possible if Fr1 is set to AI1		nO
rPG ()	❑ **PID proportional gain** Visible only if PID feedback assignment PIF is not set to nO.	0.01 to 100	1
rIG ()	❑ **PID integral gain** Visible only if PID feedback assignment PIF is not set to nO.	0.01 to 100	1
rdG ()	❑ **PID derivative gain** Visible only if PID feedback assignment PIF is not set to nO.	0.00 to 100.00	0.00
FbS ()	❑ **PID feedback scale factor** This parameter gives the relation between process range and feedback range. Visible only if PID feedback assignment PIF is not set to nO.	0.1 to 100.0	1.0
PII nO YES	❑ **Activation internal PID reference** Visible only if PID feedback assignment PIF is not set to nO. ☐ No ☐ Yes		nO
Pr2 nO L1H L2H L3H L4H	❑ **2 preset PID assignment** Visible only if PID feedback assignment PIF is not set to nO. ☐ No ☐ L1h ☐ L2h ☐ L3h ☐ L4h		nO

() Parameter that can be modified during operation or when stopped.

Code	Name/Description	Adjustment range	Factory setting
FUn-	**Function menu** (continued)		
PId-	**PID menu** (continued)		
Pr4 nO L1H L2H L3H L4H	❑ **4 preset PID assignment** Visible only if PID feedback assignment PIF page 70 is not set to nO. ☐ No ☐ L1h ☐ L2h ☐ L3h ☐ L4h 2 preset PID assignment Pr2 page 70 must be assigned before assigning 4 preset PID assignment Pr4.		nO
rP2 ()	❑ **2 preset PID reference** Visible only if PID feedback assignment PIF page 70 and 2 preset PID assignment Pr2 page 70 are not set to nO.	0 to 100%	25%
rP3 ()	❑ **3 preset PID reference** Visible only if PID feedback assignment PIF page 70 and 4 preset PID assignment Pr4 page 70 are not set to nO.	0 to 100%	50%
rP4 ()	❑ **4 preset PID reference** Visible only if PID feedback assignment PIF page 70 and 2 preset PID assignment Pr2 and 4 preset PID assignment Pr4 page 70 are not set to nO.	0 to 100%	75%
rPI ()	❑ **Internal PID reference** Visible only if PID feedback assignment PIF page 70 is not set to nO and if Activation internal PID reference PII page 70 is set to YES or Reference channel 1 Fr1 page 44 is set to LCC.	0 to 100%	0%
PrP ()	❑ **PID reference ramp** Visible only if PID feedback assignment PIF page 70 is not set to nO.	0 to 100%	0%
rPL ()	❑ **PID min value reference** Visible only if PID feedback assignment PIF page 70 is not set to nO.	0 to 100%	0%
rPH ()	❑ **PID max value reference** Visible only if PID feedback assignment PIF page 70 is not set to nO	0 to 100%	100%
SFS	❑ **PID predictive speed** This parameter allows to go directly to a set speed reference. Visible only if PID feedback assignment PIF page 70 is not set to nO.	0.1 to 400 Hz	nO

() Parameter that can be modified during operation or when stopped.

Code	Name/Description	Adjustment range	Factory setting
FUn-	**Function menu** (continued)		
PId-	**PID menu** (continued)		
AC2	❑ **Acceleration 2** This parameter is active only when the system is starting. Second acceleration ramp time, adjustable from 0.1 to 999.9 s Time to accelerate from 0 to the Rated motor frequency FrS page 55. Make sure that this value is compatible with the inertia being driven. Visible only if PID feedback assignment PIF page 70 and PID predictive speed SFS page 71 are not set to nO.	0.0 to 999.9 s	5.0 s
PIC nO YES	❑ **PID correction reverse** This parameter will reverse the internal error value of PID system. ☐ No ☐ Yes Visible only if PID feedback assignment PIF page 70 is not set to nO.		nO
PAU nO L1H L2H L3H L4H	❑ **PID auto/manual assignment** At state 0 of input, PID is active. At state 1 of input, manual run is active ☐ No ☐ L1h: LI1 active high ☐ L2h: LI2 active high ☐ L3h: LI3 active high ☐ L4h: LI4 active high Visible only if PID feedback assignment PIF page 70 is not set to nO.		nO
PIN nO AI1 AIU1	❑ **PID manual reference** This parameter allows to disable the PID and to run on a standard manual system. ☐ No ☐ Terminal ☐ AIV1 Visible only if PID feedback assignment PIF page 70 and PID auto/manual assignment PAU page 72 are not set to nO.		nO
tLS	❑ **Low speed operating time** Following operation at Low speed LSP page 75 for a defined period, a motor stop is requested automatically. The motor restarts if the frequency reference is greater than Low speed LSP and if a run command is still present. Important: nO value corresponds to an unlimited period. Visible only if PID feedback assignment PIF page 70 is not set to nO.	0.1 to 999.9 s	nO

Parameter that can be modified during operation or when stopped.

Code	Name/Description	Adjustment range	Factory setting
FUn-	**Function menu** (continued)		
PId-	**PID menu** (continued)		
rSL	❑ **PID wake up level**	0 to 100%	0%
	If PID functions and Low speed operating time tLS are set at the same time, the PID regulator may try to set a speed lower than LSP, resulting in unwanted operation consisting of start, running at LSP, stopping and so on… Parameter PID wake up level rSL is used to set a minimum PID error threshold to restart after a prolonged stop at LSP. Visible only if PID feedback assignment PIF page 70 and Low speed operating time tLS page 72 are not set to nO.		
UPP ( )	❑ **Wake-up threshold**	0 to 100%	0%
	If PID correction reverse PIC page 72 is set to nO, enables to set the PID feedback threshold beyond which the PID regulator is reactivated (wake-up), following a stop caused by exceeding the tLS maximum time in low speed. If PIC is set to YES, enables to set the PID feedback threshold above which the PID regulator is reactivated (wake-up), following a stop caused by exceeding the tLS maximum time in low speed. Visible only if PID feedback assignment PIF page 70 and Low speed operating time tLS page 75 are not set to nO.		

( ) Parameter that can be modified during operation or when stopped.

Code	Name/Description	Adjustment range	Factory setting
FUn-	**Function menu** (continued)		
CLI-	**Current limitation menu**		
LC2	❑ **2nd current limitation commutation** Assignment nO ☐ Function inactive. L1H ☐ L1H: LI1 active high L2H ☐ L2H: LI2 active high L3H ☐ L3H: LI3 active high L4H ☐ L4H: LI4 active high L1L ☐ L1L: LI1 active low L2L ☐ L2L: LI2 active low L3L ☐ L3L: LI3 active low L4L ☐ L4L: LI4 active low If the assigned input is at 0, the first current limitation is active. If the assigned input is at 1, the second current limitation is active. See LI assignment information on page 45		nO
CLI ↻	❑ **Current limitation** First current limitation. **CAUTION** **RISK OF MOTOR DAMAGE** Check that the motor will withstand this current, particularly in the case of permanent magnet synchronous motors, which are susceptible to demagnetization. **Failure to follow these instructions can result in equipment damage.**	0.25 to 1.5 In (1)	1.5 In
CL2 ↻	❑ **Current limitation 2** Second current limitation This function allows reduction of the drive current limit. Visible only if 2nd current limitation commutation LC2 is not set to nO. **CAUTION** **RISK OF MOTOR DAMAGE** Check that the motor will withstand this current, particularly in the case of permanent magnet synchronous motors, which are susceptible to demagnetization. **Failure to follow these instructions can result in equipment damage.**	0.25 to 1.5 In (1)	1.5 In

(1) In = nominal drive current

↻ Parameter that can be modified during operation or when stopped.

Code	Name/Description	Adjustment range	Factory setting
FUn-	**Function menu** (continued)		
SPL-	**Speed limit menu**		
LSP	❑ **Low speed** Motor frequency at minimum reference. This parameter is already included in "my menu" section, page 44.	0 Hz to HSP	0 Hz
tLS	❑ **Low speed operating time** Following operation at Low speed LSP for a defined period, a motor stop is requested automatically. The motor restarts if the frequency reference is greater than Low speed LSP and if a run command is still present. Important: nO corresponds to an unlimited period.	0.1 to 999.9 s	nO

High speed configuration

The logic inputs enable selection of the desired high speed.

Desired High speed	Setting	
	Parameter	State
HSP	SH2	nO
	SH4	nO
HSP2	SH2	assigned
	SH4	nO
HSP3	SH2	nO
	SH4	assigned
HSP4	SH2	assigned
	SH4	assigned

Code	Name/Description	Adjustment range	Factory setting
FUn-	**Function menu** (continued)		
SPL-	**Speed limit menu**		
HSP	❑ **High speed** Motor frequency at maximum reference, can be set between Low speed LSP and Maximum frequency tFr page 55. If tFr is decreased below the value defined for HSP, then HSP automatically decreases to the new value of tFr. This parameter is already included in "my menu" section, page 44.	LSP to tFr	50 or 60 Hz according to BFr, max TFr
SH2 nO L1H L2H L3H L4H	❑ **2 HSP assignment** ☐ No ☐ L1h: LI1 active high ☐ L2h: LI2 active high ☐ L3h: LI3 active high ☐ L4h: LI4 active high		nO
SH4 nO L1H L2H L3H L4H	❑ **4 HSP assignment** ☐ No ☐ L1h: LI1 active high ☐ L2h: LI2 active high ☐ L3h: LI3 active high ☐ L4h: LI4 active high		nO
HSP2	❑ **High speed 2** Visible only if 2 HSP assignment SH2 is not set to nO.	LSP to tFr	as HSP
HSP3	❑ **High speed 3** Visible only if 4 HSP assignment SH4 is not set to nO.	LSP to tFr	as HSP
HSP4	❑ **High speed 4** Visible only if 2 HSP assignment SH2 and 4 HSP assignment SH4 are not set to nO.	LSP to tFr	as HSP

Parameter that can be modified during operation or when stopped.

Code	Name/Description	Adjustment range	Factory setting
FLt-	**Fault detection management menu**		
rSF	❑ **Detected fault reset assignment**		nO
	Manual fault reset. nO ☐ Function inactive L1H ☐ L1h: LI1 active high L2H ☐ L2h: LI2 active high L3H ☐ L3h: LI3 active high L4H ☐ L4h: LI4 active high Faults are reset when the assigned input or bit changes to 1, if the cause of the fault has disappeared. The STOP/RESET button on the graphic display terminal performs the same function. See also Diagnostics and Troubleshooting on page 93.		
Atr-	**Automatic restart menu**		
Atr	❑ **Automatic restart**		nO
	⚠ DANGER **UNINTENDED EQUIPMENT OPERATION** Check that an automatic restart will not endanger personnel or equipment in any way. **Failure to follow these instructions will result in death or serious injury.**		
	This function allows defining the drive behaviour after a fault. If validated, this function allows an automatic restart following a fault if the cause of the fault has disappeared and the other operating conditions permit the restart. nO ☐ Function inactive YES ☐ Automatic restart, after locking on a fault, if the fault has disappeared and the other operating conditions permit the restart. The restart is performed by a series of automatic attempts separated by increasingly longer waiting periods: 1 s, 5 s, 10 s, then 1 minute for the following attempts. The drive fault relay remains activated if this function is active. The speed reference and the operating direction must be maintained. Use 2-wire control (Type of control tCC page 47 = 2C and 2 wire type control tCt page 50 = LEL). If the restart has not taken place once the Max. automatic restart time tAr has elapsed, the procedure is aborted and the drive remains locked until it is turned off and then on again. The faults, which permit this function, are listed on page 95:		
tAr	❑ **Max. automatic restart time**		5 min
	5 ☐ 5 min 10 ☐ 10 min 30 ☐ 30 min 1H ☐ 1 hour 2H ☐ 2 hours 3H ☐ 3 hours Ct ☐ Infinite Visible only if Automatic restart Atr is not set to nO. It can be used to limit the number of consecutive restarts on a recurrent fault.		

Code	Name/Description	Adjustment range	Factory setting
FLt-	**Fault detection management menu** (continued)		
FLr	❑ **Catch on the fly** Used to enable a smooth restart if the run command is maintained after the following events: • Loss of line supply or disconnection • Reset of current fault or automatic restart • Freewheel stop. The speed given by the drive resumes from the estimated speed of the motor at the time of the restart, then follows the ramp to the reference speed. This function requires 2-wire level control. ☐ Function inactive ☐ Function active		nO
nO YES			

Motor thermal protection

Function:

Thermal protection by calculating the I^2t.

- Naturally-cooled motors:
  The tripping curves depend on the motor frequency.
- Force-cooled motors:
  Only the 50 Hz tripping curve needs to be considered, regardless of the motor frequency.

Trip time in seconds

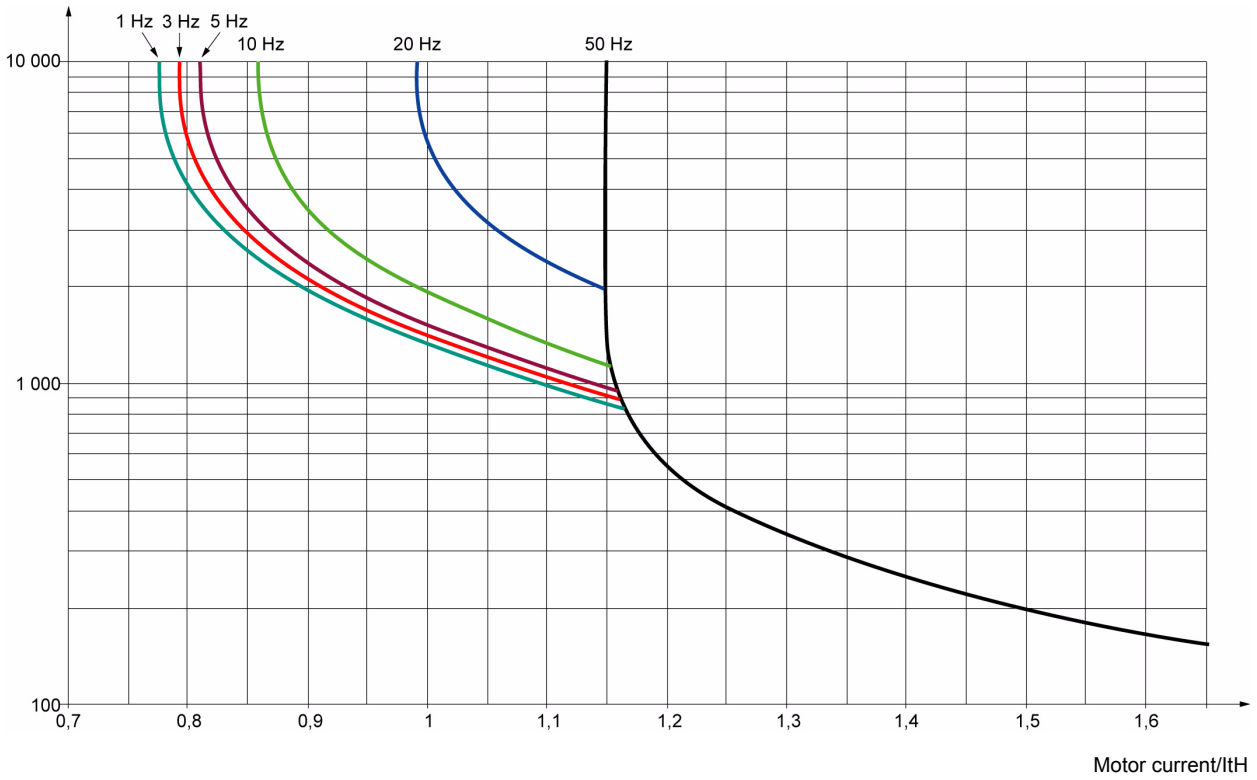

CAUTION

RISK OF DAMAGE TO THE MOTOR

The use of external overload protection is required under the following conditions:

- Repowering up the product since there is no motor thermal state memory.
- Running multiple motors
- Running motors rated at less than 0.2 times the nominal drive current
- Using motor switching

Failure to follow these instructions can result in equipment damage

Code	Name/Description	Adjustment range	Factory setting
FLt-	**Fault detection management menu** (continued)		
tHt-	**Motor thermal protection menu**		
ItH	❑ **Motor thermal current** Current used for the motor thermal detection. Set ItH to the nominal current on the motor rating plate.	0.2 to 1.5 In (1)	According to drive rating
tHt ACL FCL	❑ **Motor protection type** ☐ Self-ventilated ☐ Motor-ventilated		ACL
OLL nO YES	❑ **Overload fault management** Type of stop in the event of a motor thermal fault. ☐ Fault ignored ☐ Freewheel stop Setting Overload fault management OLL to nO inhibits the Motor overload OLF page 95. **CAUTION** **RISK OF DAMAGE TO THE MOTOR** Iif OLL is set to nO, motor thermal protection is no longuer provided by the drive. Provide an alternative means of thermal protection. **Failure to follow these instructions can result in equipment damage.**		YES
MtM nO YES	❑ **Motor thermal state memo** ☐ Motor thermal state not stored at power off. ☐ Motor thermal state is stored at power off.		nO
FLt-	**Fault detection management menu** (continued)		
OPL nO YES	❑ **Output Phase loss** ☐ Function inactive ☐ Tripping on OPF1 (1 phase loss) or OPF2 (3 phase loss) fault with freewheel stop.		YES
IPL nO YES	❑ **Input Phase loss** Invisible if drive rating is F1 and factory setting is nO Invisible if drive rating is ATV12●●●F1 and ATV12●●●M2. In this case no factory settings appears. ☐ Fault ignored. To be used when the drive is supplied via a single phase supply. ☐ Fault with freewheel stop. If one phase disappears, the drive switches to fault mode Input Phase loss IPL but if 2 or 3 phases disappear, the drive continues to operate until it trips on an undervoltage fault.		According to drive rating

(1) In = nominal drive current

Parameter that can be modified during operation or when stopped.

Code	Name/Description	Adjustment range	Factory setting
FLt-	**Fault detection management menu** (continued)		
USb-	**Undervoltage menu**		
USb	❑ **Undervoltage fault management** Behavior of the drive in the event of an undervoltage 0 ☐ Detected fault and R1 relay open. 1 ☐ Detected fault and R1 relay closed.		0
StP	❑ **Undervoltage prevention** Behavior in the event of the undervoltage fault prevention level being reached nO ☐ No action (freewheel) rMP ☐ Stop following an adjustable ramp Undervoltage ramp deceleration time StM.		nO
StM ()	❑ **Undervoltage ramp deceleration time** Ramp time if Undervoltage prevention StP = rMP.	0.0 to 10.0 s	1.0 s
FLt-	**Fault detection management menu** (continued)		
Strt	❑ **IGBT test** nO ☐ No test YES ☐ The IGBTs are tested on power up and every time a run command is sent. These tests cause a slight delay (a few ms). In the event of a fault, the drive will lock. The following faults can be detected: - Drive output short-circuit (terminals U-V-W): SCF display - IGBT faulty: xtF, where x indicates the number of the IGBT concerned IGBT short-circuited: x2F, where x indicates the number of the IGBT concerned		nO
LFL1	❑ **4-20 mA loss behaviour** nO ☐ Fault ignored. This configuration is the only one possible if AI1 current scaling parameter of 0% CrL1 page 51 is not greater than 3 mA or if AI1 type AI1t = 10U. YES ☐ Freewheel stop.		nO
InH ⌛ 2 s	❑ **Detected fault inhibition assignment** To assign fault inhibit, press and hold down the “ENT” key for 2 s. nO ☐ Function inactive L1H ☐ L1h: LI1 active high L2H ☐ L2h: LI2 active high L3H ☐ L3h: LI3 active high L4H ☐ L4h: LI4 active high **CAUTION** **RISK OF EQUIPMENT DAMAGE** Inhibiting faults results in the drive not being protected. This invalidates the warranty. Check that the possible consequences do not present any risk. **Failure to follow these instructions can result in equipment damage.**		nO

⌛ 2 s To change the assignment of this parameter press the “ENT” key for 2 s.

() Parameter that can be modified during operation or when stopped.

Code	Name/Description	Adjustment range	Factory setting
FLt-	**Fault detection management menu** (continued)		
SLL nO YES	❑ **Modbus fault management** Behavior of the drive in the event of a communication fault with integrated Modbus. ☐ Fault ignored ☐ Freewheel stop **⚠ WARNING** **LOSS OF CONTROL** If Modbus fault mgt SLL is set to nO, communication control will be inhibited. For safety reasons, inhibition of communication fault should only be used for adjustment or special applications purpose. **Failure to follow these instructions can result in death, serious injury, or equipment damage.**		YES
drn nO YES	❑ **Degraded line supply operation** Lowers the tripping threshold of the USF fault to operate on a line supply down to 50% of nominal line voltage. In this case, a line choke must be used and the performance of the drive controller cannot be guaranteed ☐ nO ☐ Yes		nO
rPr nO FtH	❑ **Reset power run** This reset will initialize the settings located on MOn section, menu MAI-, page 40. ☐ nO ☐ Reset fan time display		nO

2 s To change the assignment of this parameter press the “ENT” key for 2 s.

Parameter that can be modified during operation or when stopped.

Code	Name/Description	Adjustment range	Factory setting
COn-	**Communication menu**		
Add	❑ **Modbus address** Modbus address is adjustable from OFF to 247. When OFF, communication is not active.	OFF to 247	OFF
tbr 4.8 9.6 19.2 38.4	❑ **Modbus baud rate** ☐ 4.8 kbps ☐ 9.6 kbps ☐ 19.2 kbps ☐ 38.4 kbps		19.2
tFO 8o1 8E1 8n1 8n2	❑ **Modbus format** ☐ 8o1 ☐ 8E1 ☐ 8N1 ☐ 8N2		8E1
ttO	❑ **Modbus time out** The drive detects a Modbus fault if it does not receive any Modbus request at its address within a predefined time period (time out).	0.1 to 30 s	10 s
ICS-	**Input scanner menu** (values are expressed in hexadecimal)		
nMA1	❑ **Com scanner read address parameter 1** Address of the 1st input word.		0C81
nMA2	❑ **Com scanner read address parameter 2** Address of the 2nd input word.		219C
nMA3	❑ **Com scanner read address parameter 3** Address of the 3rd input word.		0
nMA4	❑ **Com scanner read address parameter 4** Address of the 4th input word.		0
OCS-	**Output scanner menu** (values are expressed in hexadecimal)		
nCA1	❑ **Com scanner write address parameter 1** Address of the 1st output word.		2135
nCA2	❑ **Com scanner write address parameter 2** Address of the 2nd output word.		219A
nCA3	❑ **Com scanner write address parameter 3** Address of the 3rd output word.		0
nCA4	❑ **Com scanner write address parameter 4** Address of the 4th output word.		0

Code	Name/Description	Adjustment range	Factory setting
COn-	**Communication menu** (continued)		
ISA-	**Input scanner access menu** (values are expressed in hexadecimal)		
nI1	❑ **Com scanner read address value 1** Value of the 1st input word		ETA VALUE
nI2	❑ **Com scanner read address value 2** Value of the 2nd input word		RFRD value
nI3	❑ **Com scanner read address value 3** Value of the 3rd input word		0
nI4	❑ **Com scanner read address value 4** Value of the 4rd input word		0
OSA-	**Output scanner access menu** (values are expressed in hexadecimal)		
nC1 ( )	❑ **Com scanner write address value 1** Value of the 1st output word		CMD value
nC2 ( )	❑ **Com scanner write address value 2** Value of the 2nd output word		LFRD value
nC3 ( )	❑ **Com scanner write address value 3** Value of the 3rd output word		0
nC4 ( )	❑ **Com scanner write address value 4** Value of the 4th output word		0

( ) Parameter that can be modified during operation or when stopped.

Maintenance

Servicing

The Altivar 12 does not require any preventive maintenance. However, it is advisable to perform the following checks regularly:

- The condition and tightness of connections.
- Ensure that the temperature around the unit remains at an acceptable level and that ventilation is effective. Average service life of fans: 10 years.
- Remove any dust from the drive.
- Ensure proper fan operation.
- Physical damage to covers.

Assistance with maintenance, detected fault display

If a problem arises during setup or operation, ensure that the recommendations relating to the environment, mounting and connections have been observed.

The first fault detected is stored and displayed, flashing, on the screen: the drive locks and the status relay R1 contact opens.

Clearing the detected fault

Disconnect the drive power supply in the event of a non-resettable fault.
Wait for the display to go off completely.
Find the cause of the detected fault and correct it.
Restore power to the drive.
The detected fault will no longer be present if it's cause has been corrected.
In the event of a non resettable detected fault:

- Remove/cut the power to the drive.
- WAIT 15 MINUTES to allow the DC bus capacitors to discharge. Then follow the “Bus Voltage Measurement Procedure”, page 13 to verify that the DC voltage is less than 42 V. The drive LEDs are not indicators of the absence of DC bus voltage.
- Find and correct the detected fault.
- Restore power to the drive to confirm the detected fault has been rectified.

Certain detected faults can be programmed for automatic restart after the cause has disappeared.
These detected faults can also be reset by cycling power to the drive or by means of a logic input or control bit.

Display menu

Use the display menu to show the status of the drive and it's current values as an aid for finding the causes of detected faults.

Spares and repairs

Serviceable product: Refer to the catalog for replacement of spare parts.

Procedure after a long time storage

⚠ WARNING

RISK OF EXPLOSION AT THE POWER UP

The capacitors after a long time storage can have issues. Following a storage time between 2 and 3 years:

- Use one AC supply variable connected between L1, L2 and L3.
- Increase AC supply voltage to have:
  - 25% of rated voltage during 30 min
  - 50% of rated voltage during 30 min
  - 75% of rated voltage during 30 min
  - 100% of rated voltage during 30 min

Failure to follow these instructions can result in death, serious injury, or equipment damage.

Migration ATV11 - ATV12

The ATV12 is compatible with the ATV11 (latest version), nevertheless some differences can exist between both drives.
Both models (ATV11 and ATV12) are available in heatsink or base plate versions.

Attention: ATV11 "E" Dimensions are given without potentiometer, add 7 mm depth for new dimension.

Dimensions

Attention: these dimensions concern fixing holes.

Power rating		ATV product	Drive	G (width)		H (height)		c (depth)	
kW	HP			mm	in.	mm	in.	mm	in.
0.18	0.25	12	018F1	60	2.36	131	5.16	102	4.01
0.18	0.25	11	U05F1U/A	60	2.36	131	5.16	101 (+7)	3.98 (+0.27)
0.18	0.25	12	018M2	60	2.36	131	5.16	102	4.01
0.18	0.25	11	U05M2 E/U/A	60	2.36	131	5.16	101 (+7)	3.98 (+0.27)
0.18	0.25	12	018M3	60	2.36	131	5.16	102	4.01
0.18	0.25	11	U05M3 U/A	60	2.36	131	5.16	101 (+7)	3.98 (+0.27)
0.37	0.5	12	037F1	60	2.36	120	4.72	121	4.76
0.37	0.5	11	U09F1 U/A	60	2.36	131	5.16	125 (+7)	4.92 (+0.27)
0.37	0.5	12	037M2	60	2.36	120	4.72	121	4.76
0.37	0.5	11	U09M2 E	60	2.36	120	4.72	125	4.92
0.37	0.5	11	U09M2 U/A	60	2.36	131	5.16	125 (+7)	4.92 (+0.27)
0.37	0.5	12	037M3	60	2.36	120	4.72	121	4.76
0.37	0.5	11	U09M3 U/A	60	2.36	131	5.16	125 (+7)	4.92 (+0.27)
0.55	0.75	12	055M2	60	2.36	120	4.72	131	5.16
0.55	0.75	11	U12M2 E	60	2.36	120	4.72	138	5.43
0.75	1	12	075M2	60	2.36	120	4.72	131	5.16
0.75	1	11	U18M2E	60	2.36	120	4.72	138	5.43
0.75	1	11	U18M2 U/A	60	2.36	131	5.16	138 (+7)	5.43 (+0.27)
0.75	1	12	075M3	60	2.36	120	4.72	131	5.16
0.75	1	11	U18M3 U/A	60	2.36	131	5.16	138 (+7)	5.43 (+0.27)
0.75	1	12	075F1	93	3.66	120	4.72	156	6.14
0.75	1	11	U18F1 U/A	106	4.17	131	5.16	156 (+7)	6.14 (+0.27)
1.5	2	12	U15M2	93	3.66	120	4.72	156	6.14
1.5	2	11	U29M2	106	4.17	131	5.16	156 (+7)	6.14 (+0.27)
2.2	3	12	U22M2	93	3.66	120	4.72	156	6.14
2.2	3	11	U41M2 E/U/A	106	4.17	131	5.16	156 (+7)	6.14 (+0.27)
1.5	2	12	U15M3	93	3.66	120	4.72	131	5.16
1.5	2	11	U29M3 U/A	106	4.17	131	5.16	156 (+7)	6.14 (+0.27)
2.2	3	12	U22M3	93	3.66	120	4.72	131	5.16
2.2	3	11	U41M3 U/A	106	4.17	131	5.16	156 (+7)	6.14 (+0.27)
3	4	12	U30M3	126	4.96	159	6.26	141	5.55
3	4	11	-	-	-	-	-	-	-
4	5.5	12	U40M3	126	4.96	159	6.26	141	5.55
4	5.5	11	-	-	-	-	-	-	-

Terminals

Power

- Before wiring power terminals, connect the ground terminal of the grounding screws located below the output terminals to the protective ground (see indicator B page 19).
- The power connections are available without removing the power terminal cover. Nevertheless, if necessary, it is possible to remove them using an adapted tool (IP20 protection requirement). Cover to be removed in case of using ring terminals (pressure stress is 14 N for size 1 and 20 N for sizes 2 and 3).
- Pay attention to the input ground terminal located **on the right of the connector** (was on left on ATV11). The ground connection is clearly indicated on the input power terminal cover and the screw colour is green.

Control

⚠ WARNING

IMPROPER CONTROL WIRING PRACTICES

- The ATV12 drive internal supply is 24 V rather than 15 V on ATV11. When replacing ATV11 drive with an ATV12, a voltage adaptor, reference VW3A9317 must be connected to the 24 V supply if it is used to supply external automation systems. Using the 24 V to supply the LI does not required any adaptor.
- When replacing ATV11 drive with an ATV12 drive, verify that all wiring connections to the ATV12 drive comply with all wiring instructions in this manual.

Failure to follow these instructions can result in death, serious injury, or equipment damage.

⚠ ⚠ DANGER

HAZARD OF ELECTRIC SHOCK, EXPLOSION, OR ARC FLASH

- The drive panel must be properly grounded before power is applied.
- Use the provided ground connecting point. The ground terminal (green screw) is at the opposite location it was on the ATV11.

Failure to follow these instructions will result in death or serious injury.

Important: The control terminals are arranged and marked differently:

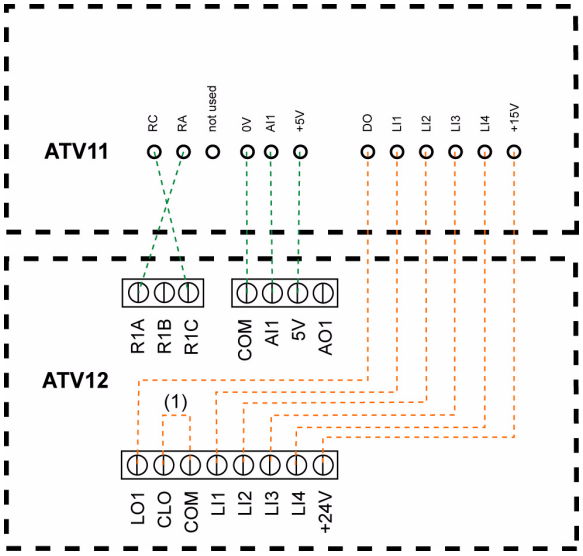

(1) if "DO" has been used on ATV11

(1) On ATV11 DO is an analog output that can be configured as a logic output. On ATV12, depending on your configuration, DO can be linked to LO1 or AO1.

The ATV11 integrates an internal supply voltage of 15V, ATV12 now integrates an internal supply of 24V.

Settings

The information below explains the differences between the ATV11 and ATV12 to assist with replacement. This information is helpful for the management of drive embedded HMI (RUN, STOP keypad and potentiometer to dial).

Replacing an ATV11…E

The ATV11E does not have RUN / STOP buttons neither potentiometer.
The ATV12 in factory settings is equivalent to ATV11E.
LI2 to LI4 and AO1 are not assigned on ATV12.

Replacing an ATV11…U

The main change is on the bFr and HSP settings. It is now 50 Hz as factory setting on ATV12.
EMC filters are now integrated in ATV12●●●●M2.
LI2 to LI4 and AO1 are not assigned on ATV12.

Replacing an ATV11…A

EMC filters are now integrated in ATV12●●●●M2.
LI2 to LI4 and AO1 are not assigned on ATV12.
The active command channel is on terminals for ATV12 (was front keypad on ATV11…A).
To make embeded HMI active, it is necessary to set Reference channel 1 Fr1 page 44 to AIU1

Replacing an ATV11…E327

LI2 to LI4 and AO1 are not assigned on ATV12.
The active command channel is on terminal for ATV12 (was front keypad on ATV11…A).

ATV12 factory setting characteristics: see page 29.

Functions - Comparison with ATV11●●●E versions

Function	ATV11		ATV12		Comments, Action
	Code	Value	Code	Value	
Frequency	bFr	50	bFr	50	No change.
High Speed	HSP	50	HSP	50	No change.
LI operation Logic	-	(Positive)	nPL	POS	"Depend on LI assignment on each function (LI1 to LI4 L or H). See function assignment page 50"
Integrated EMC filter	-	Yes	-	Yes	No change.
LI assignment	LI1	Forward	LI1	Forward	No change.
	LI2	Reverse	LI2	-	Change rrS (COnF, FULL, Fun, rrS), LI2.
	LI3	2 Preset speed	LI3	-	Change PS2 (COnF, FULL, Fun, PSS, Pr2), LI3.
	LI4	4 Preset speed	LI4	-	Change PS4 (COnF, FULL, Fun, PSS, Pr4), LI4.
Speed reference	SP2	10	SP2	10	No change.
	SP3	25	SP3	15	Change SP3 (COnF, FULL, Fun, PSS, SP3), 25.
	SP4	50	SP4	20	Change SP4 (COnF, FULL, Fun, PSS, SP4), 50.
AO assignment	(dO, ACt), rFr	Motor frequency	AO1	-	Change AO1 (COnF, FULL, I-O, AO1-,AO1), OFr.
AI assignment	(AI1t, ACt), SU	Speed ref. 5V	AI1t	Speed ref. 5V	No change.
Command channel	LSr	-	Fr1	-	No change.
	SSr	-	FLO	-	No change. (possible setting on FLO & FLOC)
			FLOC	-	
Motor parameter choice	COS	According to rating	COS	-	COS is visible only if Motor parameter choice "MPC" is set to COS. Change MPC (COnF, FULL, drC-, MPC), COS. Change COS (COnF, FULL, drC-, COS), According to rating.
Motor control type	unchangeable	SVC	Ctt	STD (U/F)	Change CTT (COnF, FULL, drC-, CTT), PERF (SVCU).

Functions - Comparison with ATV11●●●U versions

Function	ATV1		ATV12		Comments, Action
	Code	Value	Code	Value	
Frequency	bFr	60	bFr	50	Change bFr (COnF, bFr), 50.
High Speed	HSP	60	HSP	50	Change HSP (COnF, HSP), 50.
LI operation Logic	-	(Positive)	nPL	POS	"Depend on LI assignment on each function (LI1 to LI4 L or H). See function assignment page 50"
Integrated EMC filter	-	Yes	-	Yes	"Possible to disable filter using IT jumper. See page 27."
LI assignment	LI1	Forward	LI1	Forward	No change.
	LI2	Reverse	LI2	-	Change rrS (COnF, FULL, Fun, rrS), LI2.
	LI3	2 Preset speeds	LI3	-	Change PS2 (COnF, FULL, Fun, PSS, Pr2), LI3.
	LI4	4 Preset speeds	LI4	-	Change PS4 (COnF, FULL, Fun, PSS, Pr4), LI4.
Speed reference	SP2	10	SP2	10	No change.
	SP3	25	SP3	15	Change SP3 (COnF, FULL, Fun, PSS, SP3), 25.
	SP4	50	SP4	20	Change SP4 (COnF, FULL, Fun, PSS, SP4), 50.
AO assignment	(dO, ACt), rFr	Motor frequency	AO1	-	Change AO1 (COnF, FULL, I-O, AO1-,AO1), OFr.
AI assignment	(AI1, ACt), SU	Speed ref. 5V	AI1t	Speed ref. 5V	No change.
Command channel	LSr	-	Fr1	-	No change.
	SSr	-	FLO	-	No change. (possible setting on FLO & FLOC)
			FLOC	-	
Motor parameter choice	COS	According to rating	COS	-	COS is visible only if Motor parameter choice "MPC" is set to COS. Change MPC (COnF, FULL, drC-, MPC), COS. Change COS (COnF, FULL, drC-, COS), According to rating.
Motor control type	unchangeable	SVC	Ctt	STD (U/F)	Change CTT (COnF, FULL, drC-, CTT), PERF (SVCU).

Functions - Comparison with ATV11●●●A versions

Function	ATV1		ATV12		Comments, Action
	Code	Value	Code	Value	
Frequency	bFr	50	bFr	50	No change.
High Speed	HSP	50	HSP	50	No change.
LI operation Logic	-	(Positive)	nPL	POS	"Depend on LI assignment on each function (LI1 to LI4 L or H). See function assignment page 50"
Integrated EMC filter	-	No	-	Yes	"Possible to disable filter using IT jumper. See page 27."
LI assignment	LI1	Forward	LI1	Forward	No change.
	LI2	Reverse	LI2	-	Change rrS (COnF, FULL, Fun, rrS), LI2.
	LI3	2 Preset speeds	LI3	-	Change PS2 (COnF, FULL, Fun, PSS, Pr2), LI3.
	LI4	4 Preset speeds	LI4	-	Change PS4 (COnF, FULL, Fun, PSS, Pr4), LI4.
Speed reference	SP2	10	SP2	10	No change.
	SP3	25	SP3	15	Change SP3 (COnF, FULL, Fun, PSS, SP3), 25.
	SP4	50	SP4	20	Change SP4 (COnF, FULL, Fun, PSS, SP4), 50.
AO assignment	(dO, ACt), rFr	Motor frequency	AO1	-	Change AO1 (COnF, FULL, I-O, AO1-,AO1), OFr.
AI assignment	(AI1, ACt), SU	Speed ref. 5V	AI1t	Speed ref. 5V	No change.
Command channel	LSr	LOC	Fr1	AI1	Change FR1 (COnF, FULL, CtL-, FR1), AIU1.
	(tCC, Act), LOC	Local control (RUN / STOP)	CHCF	SIM	No change.
			Cd1	-	
Motor parameter choice	COS	According to rating	COS	-	COS is visible only if Motor parameter choice "MPC" is set to COS. Change MPC (COnF, FULL, drC-, MPC), COS. Change COS (COnF, FULL, drC-, COS), According to rating.
Motor control type	unchangeable	SVC	Ctt	STD (U/F)	Change CTT (COnF, FULL, drC-, CTT), PERF (SVCU).

Functions - Comparison with ATV11●●●E327 versions

Function	ATV1		ATV12		Comments, Action
	Code	value	Code	value	
Frequency	bFr	50	bFr	50	No change.
High Speed	HSP	50	HSP	50	No change.
LI operation Logic	-	(Positive)	nPL	POS	"Depend on LI assignment on each function (LI1 to LI4 L or H). See function assignment page 50"
Integrated EMC filter	-	Yes	-	Yes	"Possible to disable filter using IT jumper. See page 27."
Li assignment	LI1	Forward	LI1	Forward	No change.
	LI2	Reverse	LI2	-	Change rrS (COnF, FULL, Fun, rrS), LI2.
	LI3	2 Preset speeds	LI3	-	Change PS2 (COnF, FULL, Fun, PSS, Pr2), LI3.
	LI4	4 Preset speeds	LI4	-	Change PS4 (COnF, FULL, Fun, PSS, Pr4), LI4.
Speed reference	SP2	10	SP2	10	No change.
	SP3	25	SP3	15	Change SP3 (COnF, FULL, Fun, PSS, SP3), 25.
	SP4	50	SP4	20	Change SP4 (COnF, FULL, Fun, PSS, SP4), 50.
AO assignment	(dO, ACt), rFr	Motor frequency	AO1	-	Change AO1 (COnF, FULL, I-O, AO1-,AO1), OFr.
AI assignment	(AIt, ACt), SU	Speed ref. 5V	AI1t	Speed ref. 5V	No change.
Command channel	LSr	LOC	Fr1	AI1	Change FR1 (COnF, FULL, CtL-, FR1), AIU1.
	(tCC, Act), LOC	Local control (RUN / STOP)	CHCF	SIM	No change.
			Cd1	-	
Motor parameter choice	COS	Acc. to rating	COS	-	COS is visible only if Motor parameter choice "MPC" is set to COS. Change MPC (COnF, FULL, drC-, MPC), COS. Change COS (COnF, FULL, drC-, COS), Acc. To rating.
Motor control type	unchangeable	SVC	Ctt	STD (U/F)	Change CTT (COnF, FULL, drC-, CTT), PERF (SVCU).

Drive does not start, no error code displayed

- If the display does not light up, check the power supply to the drive (ground and input phases connection, see page 19).
- The assignment of the "Fast stop" or "Freewheel" functions will prevent the drive starting if the corresponding logic inputs are not powered up. The ATV12 then displays nSt in freewheel stop and FSt in fast stop, it will display rdY en freewhell stop. This is normal since these functions are active at zero so that the drive will be stopped safely if there is a wire break. Assignment of LI to be checked in CONF/FULL/FUn-/Stt- menu.
- Make sure that the run command input(s) is activated in accordance with the selected control mode (parameters Type of control tCC page 47 and 2 wire type control tCt page 50, in CONF/FULL/ I_O- menu).
- If the reference channel or command channel is assigned to Modbus, when the power supply is connected, the drive displays "nSt" freewheel and remain in stop mode until the communication bus sends a command.
- In factory setting "RUN" button is inactive. Adjust parameters Reference channel 1 Fr1 page 60 and Command channel 1 Cd1 page 61 to control the drive locally (CONF/FULL/CtL- menu). See How to control the drive locally page 45.

Fault detection codes that cannot be reset automatically

The cause of the fault must be removed before resetting by turning off and then on.

SOF and tnF faults can also be reset remotely by means of a logic input (parameter Detected fault reset assignment rSF page 77 in CONF/FULL/FLt- menu).

InFb, SOF and tnF faults can be inhibited and cleared remotely by means of a logic input (parameter Detected fault inhibition assignment InH page 81).

Code	Name	Possible causes	Remedy
CrF1	Precharge	• Charging relay control fault or charging resistor damaged	• Turn the drive off and then back on again • Check the connections • Check the stability of the main supply • Contact your local Schneider Electric representative
InF1	Unknown drive rating	• The power card is different from the card stored	• Contact your local Schneider Electric representative
InF2	Unknown or incompatible power board	• The power card is incompatible with the control card	• Contact your local Schneider Electric representative
InF3	Internal serial link	• Communication fault between the internal cards	• Contact your local Schneider Electric representative
InF4	Invalid industrialization zone	• Inconsistent internal data	• Contact your local Schneider Electric representative
InF9	Current measurement circuit failure	• Current measurement is not correct due to hardware circuit	• Contact your local Schneider Electric representative
----	Problem of application Firmware	• Bad application firmware update using the Multi-Loader tool	• Flash again the application firmware of the product
InFb	Internal thermal sensor failure	• The drive temperature sensor is not operating correctly • The drive is in short circuit or open	• Contact your local Schneider Electric representative
InFE	Internal CPU	• Internal microprocessor fault	• Turn the drive off and then back on again • Contact local Schneider Electric representative

Fault detection codes that cannot be reset automatically (continued)

Code	Name	Possible causes	Remedy
OCF	Overcurrent	• Parameters in the Motor control menu drC- page 55 are not correct • Inertia or load too high • Mechanical locking	• Check the parameters • Check the size of the motor/drive/load • Check the state of the mechanism • Connect line motor chokes • Reduce the Switching frequency SFr page 57 • Check the ground connection of drive, motor cable and motor insulation.
SCF1	Motor short circuit	• Short-circuit or grounding at the drive output • Ground fault during running status • Commutation of motors during running status • Significant current leakage to ground if several motors are connected in parallel	• Check the cables connecting the drive to the motor, and the motor insulation • Connect motor chokes
SCF3	Ground short circuit		
SCF4	IGBT short circuit	• Internal power component short circuit detected at power on	• Contact your local Schneider Electric representative
SOF	Overspeed	• Instability • Overspeed associated with the inertia of the application	• Check the motor • Overspeed is 10% more than Maximum frequency tFr page 55 so adjust this parameter if necessary • Add a braking resistor • Check the size of the motor/drive/load • Check parameters of the speed loop (gain and stability)
tnF	Auto-tuning	• Motor not connected to the drive • One motor phase loss • Special motor • Motor is rotating (being driven by the load, for example)	• Check that the motor/drive are compatible • Check that the motor is present during auto-tuning • If an output contactor is being used, close it during auto-tuning • Check that the motor is completely stopped

Fault detection codes that can be reset with the automatic restart function, after the cause has disappeared

These faults can also be reset by turning on and off or by means of a logic input (parameter Detected fault reset assignment rSF page 77). OHF, OLF, OPF1, OPF2, OSF, SLF1, SLF2, SLF3 and tJF faults can be inhibited and cleared remotely by means of a logic input (parameter Detected fault inhibition assignment InH page 81).

Code	Name	Possible causes	Remedy
LFF1	AI current lost fault	Detection if: • Analog input AI1 is configured as current • AI1 current scaling parameter of 0% CrL1 page 51 is greater than 3 mA • Analog input current is lower than 2 mA	• Check the terminal connection
ObF	Overbraking	• Braking too sudden or driving load too high	• Increase the deceleration time • Install a module unit with a braking resistor if necessary • Check the line supply voltage, to be sure that it is under the maximum acceptable (20% over maximum line supply during run status)
OHF	Drive overheat	• Drive temperature too high	• Check the motor load, the drive ventilation and the ambient temperature. Wait for the drive to cool down before restarting. See Mounting and temperature conditions page 12.
OLC	Process overload	• Process overload	• Check the process and the parameters of the drive to be in phase
OLF	Motor overload	• Triggered by excessive motor current	• Check the setting of the motor thermal protection, check the motor load.
OPF1	1 output phase loss	• Loss of one phase at drive output	• Check the connections from the drive to the motor • In case of using downstream contactor, check the right connection, cable and contactor
OPF2	3 output phase loss	• Motor not connected • Motor power too low, below 6% of the drive nominal current • Output contactor open • Instantaneous instability in the motor current	• Check the connections from the drive to the motor • Test on a low power motor or without a motor: In factory settings mode, motor phase loss detection is active Output Phase loss detection OPL page 80 = YES. To check the drive in a test or maintenance environment, without having to use a motor with the same rating as the drive, deactivate motor phase loss detection Output Phase loss detection OPL = nO • Check and optimize the following parameters: IR compensation (law U/F) UFr page 56, Rated motor voltage UnS page 55 and Rated motor current nCr page 55 and perform an Auto-tuning tUn page 58.
OSF	Main overvoltage	• Line voltage too high: - At drive power on only, the supply is 10% over the maximum acceptable voltage level - Power with no run order, 20% over the maximum line supply • Disturbed line supply	• Check the line voltage

Fault detection codes that can be reset with the automatic restart function, after the cause has disappeared (continued)

Code	Name	Possible causes	Remedy
PHF	Input phase loss	• Drive incorrectly supplied or a fuse blown • Failure of one phase • 3-phase ATV12 used on a single-phase line supply • Unbalanced load • This protection only operates with the drive on load	• Check the power connection and the fuses. • Use a 3-phase line supply. • Disable the fault by setting Input Phase loss detection IPL page 80 = nO.
SCFS	Load short circuit	• Short-circuit at drive output • Short circuit detection at the run order or DC injection order if parameter IGBT test Strt page 81 is set to YES	• Check the cables connecting the drive to the motor, and the motor's insulation
SLF1	Modbus communication	• Interruption in communication on the Modbus network	• Check the connections of communication bus. • Check the time-out (Modbus time out ttO parameter page 83) • Refer to the Modbus user manual
SLF2	SoMove communication	• Fault communicating with SoMove	• Check the SoMove connecting cable. • Check the time-out
SLF3	HMI communication	• Fault communicating with the external display terminal	• Check the terminal connection
ULF	Process underload fault	• Process underload • Motor current below the Application Underload threshold LUL parameter page 53 during a period set by Application underload time delay ULt parameter page 53 to protect the application.	• Check the process and the parameters of the drive to be in phase
tJF	IGBT overheat	• Drive overheated • IGBT internal temperature is too high according to ambient temperature and load	• Check the size of the load/motor/drive. • Reduce the Switching frequency SFr page 57. • Wait for the drive to cool before restarting

Faults codes that will be reset as soon as their causes disappear

The USF fault can be inhibited and cleared remotely by means of a logic input (Detected fault inhibition assignment InH parameter page 81).

Code	Name	Possible causes	Remedy
CFF	Incorrect configuration	• HMI block replaced by an HMI block configured on a drive with a different rating • The current configuration of customer parameters is inconsistent	• Return to factory settings or retrieve the backup configuration, if it is valid. • If the fault remains after reverting to the factory settings, contact your local Schneider Electric representative
CFI (1)	Invalid configuration	• Invalid configuration The configuration loaded in the drive via the bus or communication network is inconsistent. The configuration upload has been interrupted or is not fully finished.	• Check the configuration loaded previously. • Load a compatible configuration
CFI2	Download invalid configuration	• Interruption of download operation with Loader or SoMove	• Check connection with Loader or SoMove. • To reset the default re-start the download operation or restore the factory setting
USF	Undervoltage	• Line supply too low • Transient voltage dip	• Check the voltage and the parameters of Undervoltage Phase Loss Menu USb- page 81.

(1) When the CFI is present in the past fault menu, it means the configuration has been interrupted or is not fully finished.

HMI block changed

When an HMI block is replaced by an HMI block configured on a drive with a different rating, the drive locks in Incorrect configuration CFF fault mode on power-up. If the card has been deliberately changed, the fault can be cleared by pressing the ENT key twice, which **restores all the factory settings**.

Remote keypad error messages

Code	Name	Description
In It:	On initializing itself	• Micro controller initializing • Communication configuration search
COM. E (1)	Communication error	• It has 50ms time out error. • This message is shown after 220 retry attempts.
A - 17 (1)	Key alarm	• Key has been pressed consecutively for more than 10 seconds. • Membrane switch disconnected. • Keypad woken up while a key is being pressed.
cLr (1)	Confirm Fault reset	• This message appears if the STOP key is pressed when there is a keypad fault.
dEU. E (1)	Drive mismatch	• Drive type (brand) did not match with keypad type (brand)
rOM. E (1)	ROM abnormality	• Keypad ROM abnormality detected by the checksum calculation.
rAM. E (1)	RAM abnormality	• Keypad RAM abnormality detected.
CPU. E (1)	The other defect	• The other defectt.

(1) Flashing

2-wire control (source)

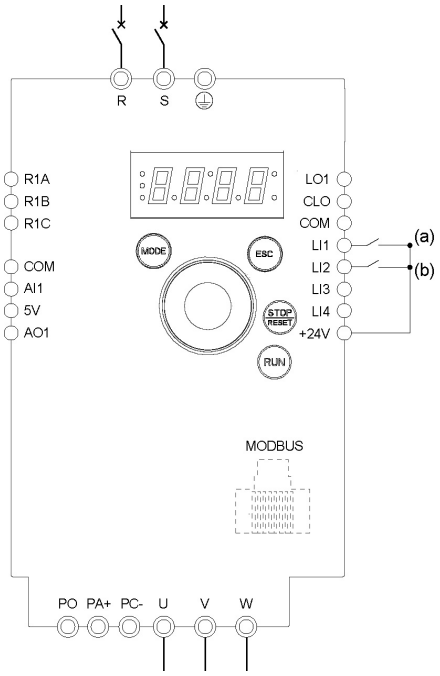

(a): Run Forward (b): Run Reverse

1. Connect the ground terminal to the grounding screws located below the output terminals.
2. Connect the power terminals.
3. Connect the logic inputs.
4. Turn on the drive without giving a run command.
5. Assign factory settings to the drive, Factory / recall customer parameter set FCS page 45 set to In I.
6. Set the motor parameters (in COnF mode) only if the factory configuration of the drive is not suitable.
7. Perform an auto-tuning.
8. Set Reverse direction rrS parameter page 64 to L I2H

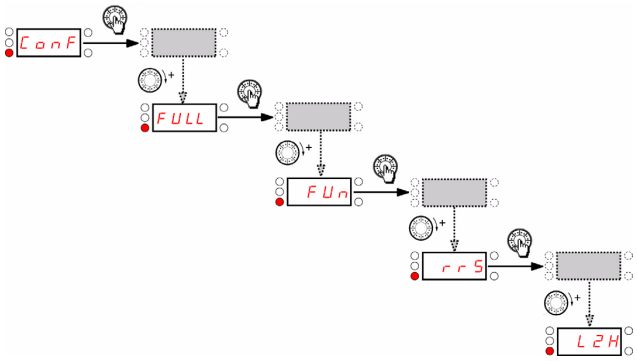

9. Start

3-wire control (sink)

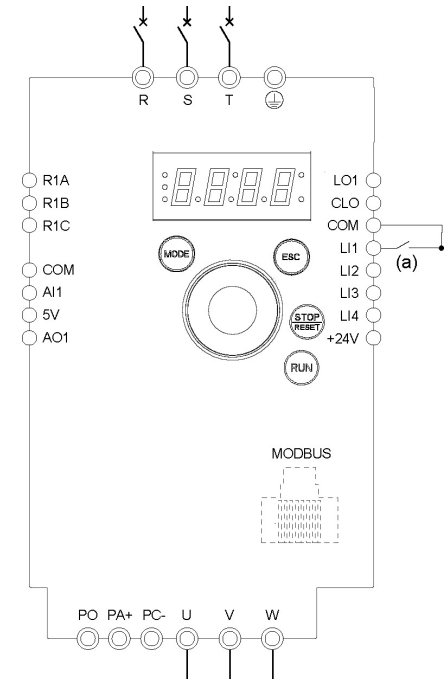

(a): Run Forward

1. Connect the ground terminal to the grounding screws located below the output terminals.
2. Connect the power terminals.
3. Connect the logic inputs.
4. Turn on the drive without giving a run command.
5. Assign factory settings to the drive, Factory / recall customer parameter set FCS page 45 set to In I.
6. Set tCC to 3C see page 47
7. Set the motor parameters (in COnF mode) only if the factory configuration of the drive is not suitable.
8. Perform an auto-tuning.
9. Set Logic inputs type nPL parameter page 50 to nEG

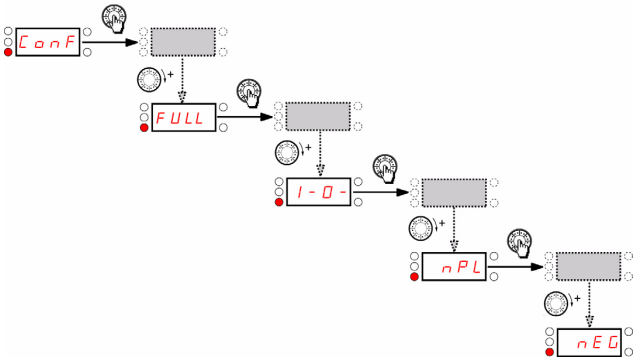

10. Start

Speed control 0-20 mA (source)

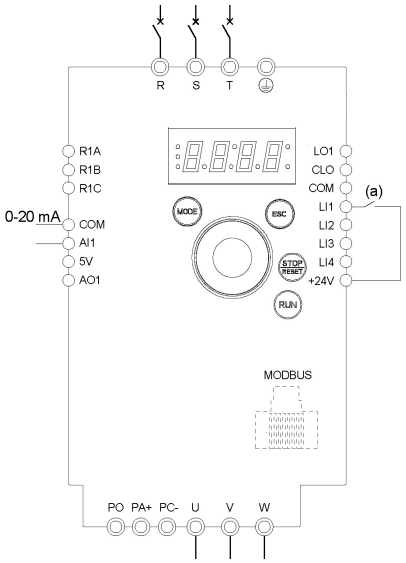

(a) Run Forward

1. Connect the ground terminal to the grounding screws located below the output terminals.
2. Connect the power terminals.
3. Connect the logic input LI1 and analog input AI1.
4. Turn on the drive without giving a run command.
5. Assign factory settings to the drive, Factory / recall customer parameter set FCS page 45 set to In I.
6. Set the motor parameters (in COnF mode) only if the factory configuration of the drive is not suitable.
7. Perform an auto-tuning.
8. Set AI1 type AI1t page 51 to 0A and AI1 current scaling parameter of 0% CrL1 page 51 to 0 A.
   Check that AI1 current scaling parameter of 100% CrH1 page 51 is set to 20 mA.

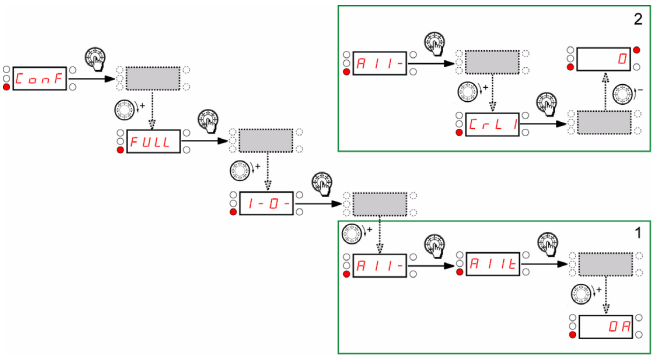

9. Start.

4 Preset speeds (source)

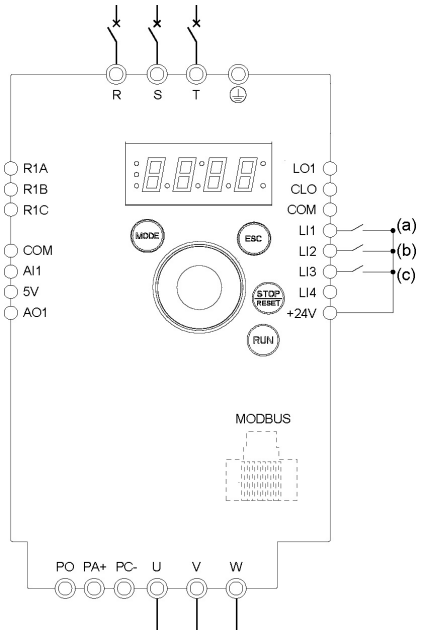

(a): Run Forward
(b): 2 preset speeds (c): 4 preset speeds

Important: Please refer to Function compatibility table page 35.

1. Connect the ground terminal to the grounding screws located below the output terminals.
2. Connect the power terminals.
3. Connect the logic inputs.
4. Turn on the drive without giving a run command.
5. Assign factory settings to the drive, Factory / recall customer parameter set FCS page 45 set to In I.
6. Set the motor parameters (in COnF mode) only if the factory configuration of the drive is not suitable.
7. Perform an auto-tuning.
8. Set 2 Preset speeds PS2 page 68 to L2H.
9.

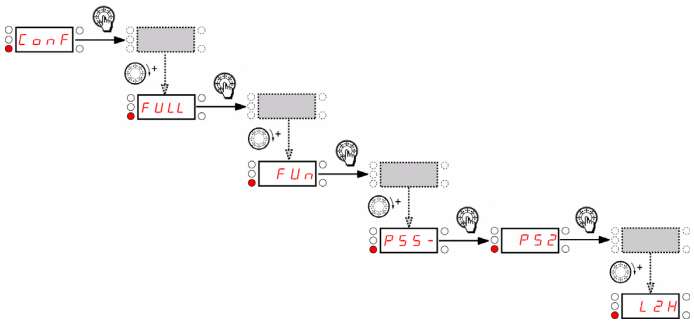

Set Preset speed 2 SP2 page 68 to 20 Hz.

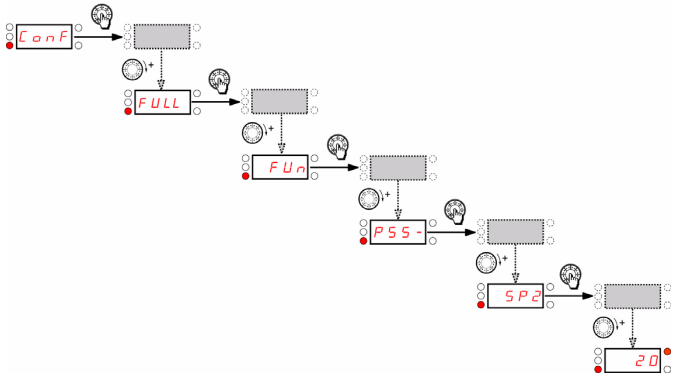

Set 4 Preset speeds PS4 page 68 to L3H.

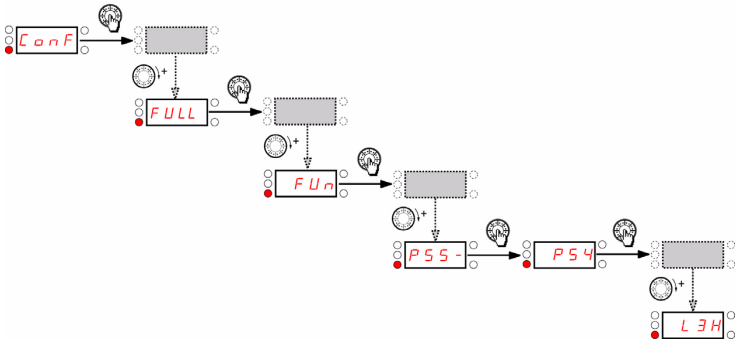

Set Preset speed 3 SP3 page 68 to 30 Hz.

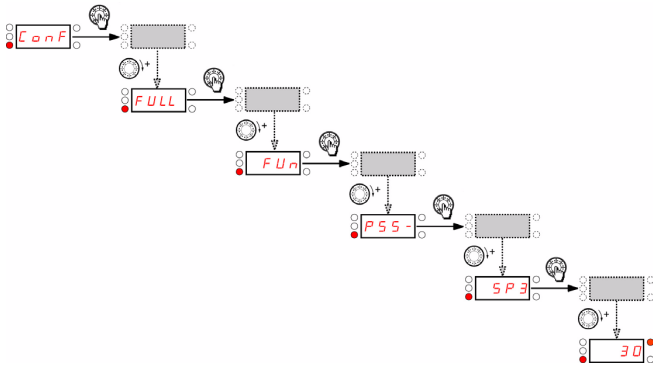

4 Preset speeds (source) continued

Set Preset speed 4 SP4 page 68 to 40 Hz.

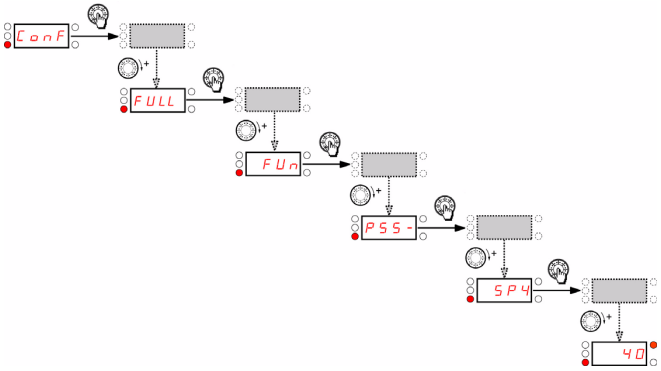

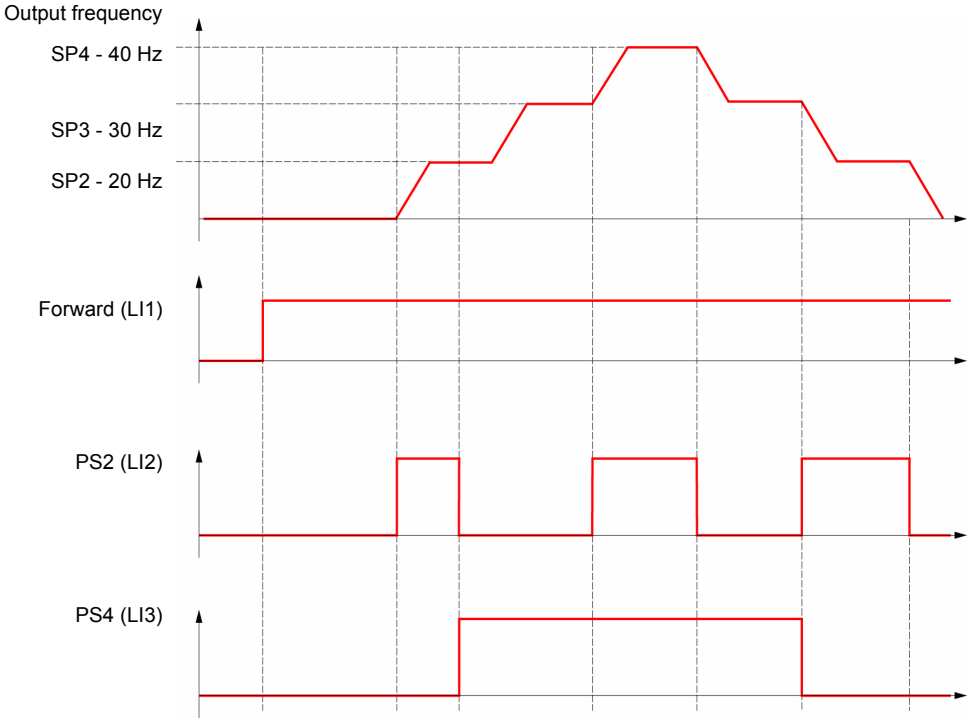

Terminals command channel with Modbus reference channel

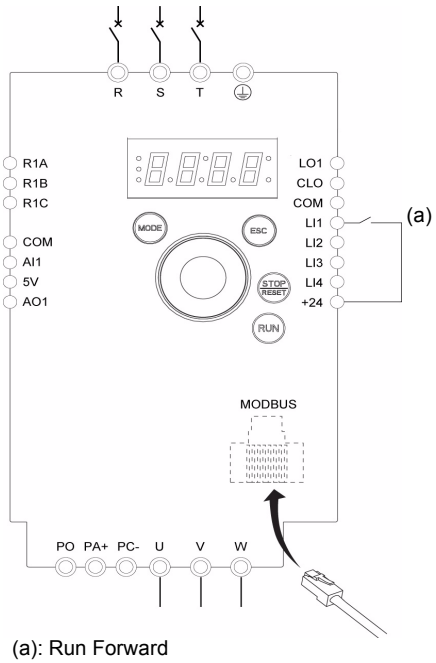

(a): Run Forward

Important: Please refer to Function compatibility table page 35.

1. Connect the ground terminal to the grounding screws located below the output terminals.
2. Connect the power terminals.
3. Connect the logic input LI1 and plug RJ45 cable to the Modbus socket.
4. Turn on the drive without giving a run command.
5. Assign factory settings to the drive, Factory / recall customer parameter set FCS page 45 set to In I.
6. Set the motor parameters (in COnF mode) only if the factory configuration of the drive is not suitable.
7. Perform an auto-tuning.
8. Set Channel configuration CHCF page 60 to SEP.

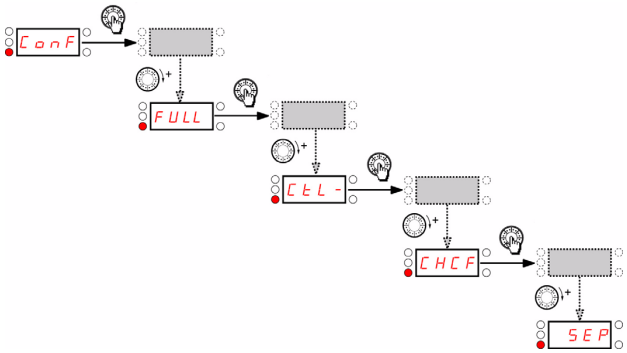

Set Reference channel 1 Fr1 page 60 to Mdb.

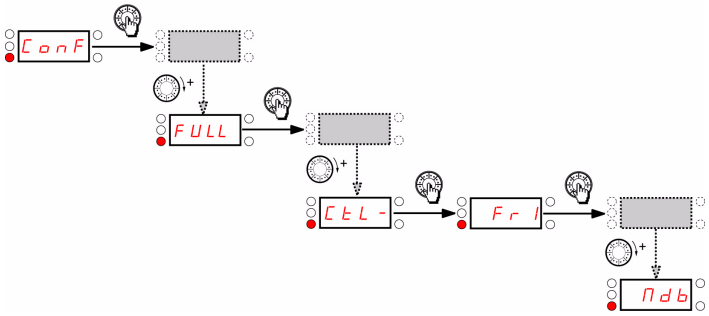

Check that Command channel 1 Cd1 page 61 is set to tEr.

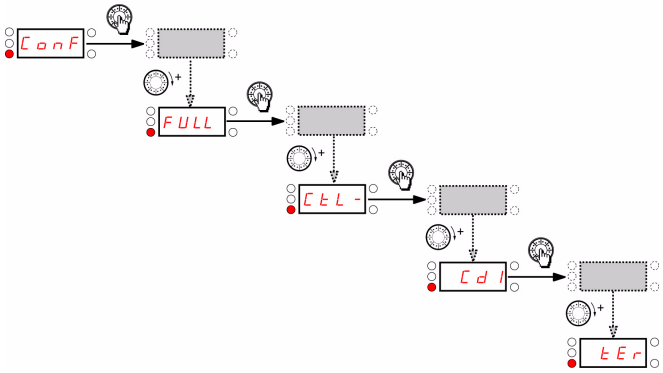

9. Start

Recommended branch circuit protection

Reference	Voltage (Y)	Input withstand rating (1)	Output Interrupt rating (X) (2)	Branch circuit protection (Z1)	Rating (Z2)
	V	kA	kA		A
ATV12H018F1	100 - 120	1	5	Ferraz HSJ	15
ATV12H037F1	100 - 120	1	5	Ferraz HSJ	25
ATV12H075F1	100 - 120	1	5	Ferraz HSJ	40
ATV12H018M2	200 - 240	1	5	Fast Acting Class CC Ferraz ATDR	7
ATV12H037M2	200 - 240	1	5	Ferraz HSJ	15
ATV12H055M2	200 - 240	1	5	Ferraz HSJ	25
ATV12H075M2	200 - 240	1	5	Ferraz HSJ	25
ATV12HU15M2	200 - 240	1	5	Ferraz HSJ	40
ATV12HU22M2	200 - 240	1	5	Ferraz HSJ	45
ATV12H018M3	200 - 240	5	5	Fast Acting Class CC Ferraz ATDR	7
ATV12H037M3	200 - 240	5	5	Fast Acting Class CC Ferraz ATDR	7
ATV12H075M3	200 - 240	5	5	Ferraz HSJ	15
ATV12HU15M3	200 - 240	5	5	Ferraz HSJ	25
ATV12HU22M3	200 - 240	5	5	Ferraz HSJ	25
ATV12HU30M3	200 - 240	5	5	Ferraz HSJ	40
ATV12HU40M3	200 - 240	5	5	Ferraz HSJ	45

Suitable for use on a circuit capable of delivering not more than___X___rms symmetrical kilo Amperes,___Y___Volts maximum, when protected by___Z1___with a maximum rating of___Z 2___.

(1) Input withstand rating is that for which the product has been designed thermally. Installation on a supply greater than this level will require additional inductance to satisfy this level.

(2) Output interrupt rating relies on Integral solid state short circuit protection. This does not provide branch circuit protection. Branch circuit protection must be provided in accordance with the National Electrical Code and any additional local codes. This is dependant on the type of installation.

Organization tree

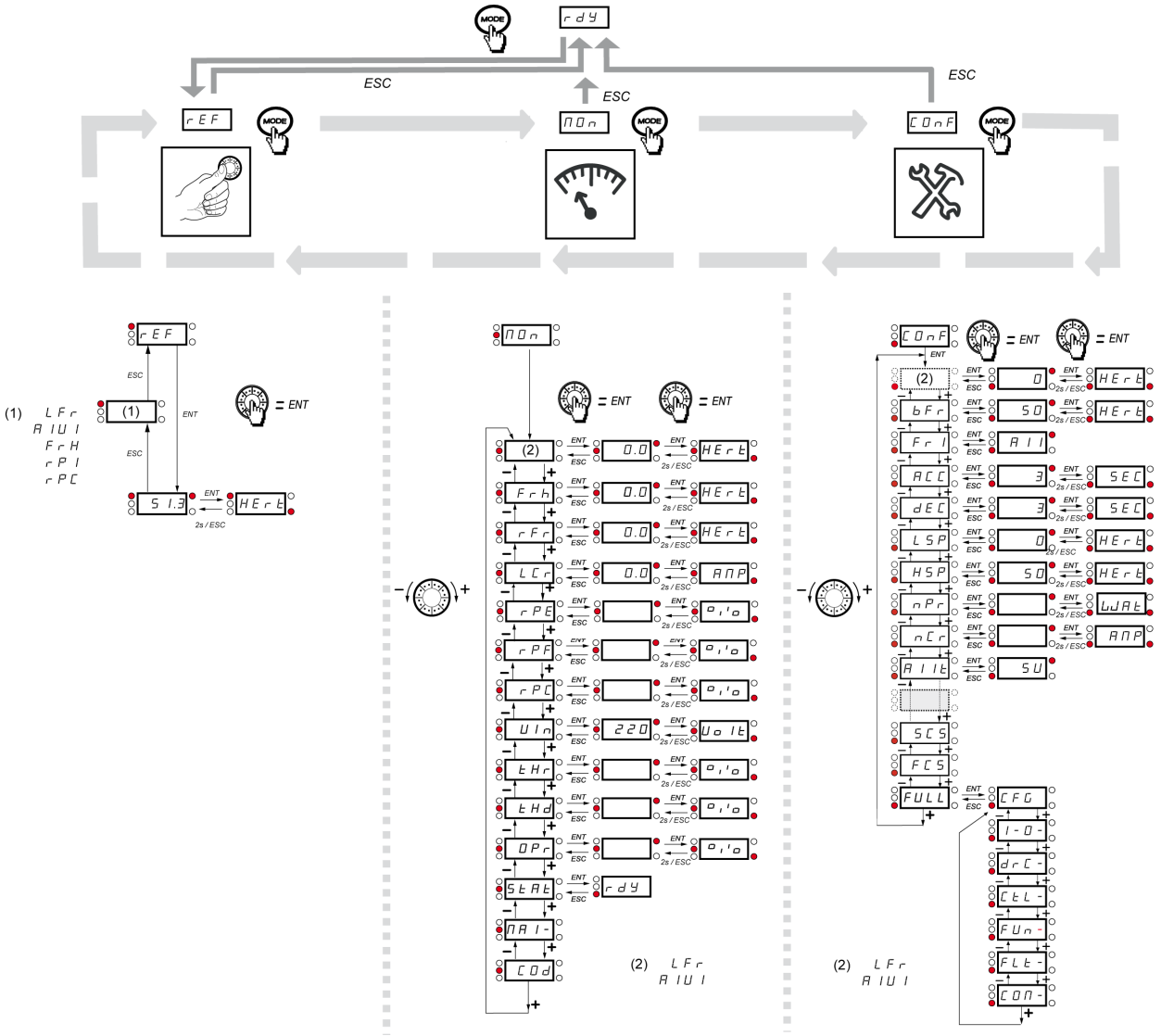

Code	Page	Name	Unit	Possible value / Function		Factory setting	User setting
AC2	63 72	Acceleration 2	s	0.0 to 999.9	-	5 s	
ACC	44 62	Acceleration	s	0.0 to 999.9	-	3.0 s	
AdC	65	Automatic DC injection		nO YES Ct	No Yes Continuous	YES	
Add	83	Modbus address		OFF to 247	-	Off	
AI1t	51	AI1 type	-	5U 10U 0A	Voltage Voltage Current	5U	
AIU1	36 38 44 60	Analog input virtual	%	0 to 100	-	-	
AO1	54	AO1 assignment		nO OCr OFr OrP OPS OPF OPE OPr tHr tHd	No Motor current Output frequency Ramp output PID reference PID feedback PID error Output power Motor thermal state Drive thermal state	nO	
AO1t	54	AO1 type		10U 0A 4A	Voltage Current Current	0A	
Atr	77	Automatic restart		nO YES	No Yes	nO	
bFr	44 55	Standard motor frequency	Hz	50 60	-	50 Hz	
brA	63	Decel Ramp Adaptation assignment		nO YES dYnA	No Yes Motor braking	YES	
C1SU	40	Card 1 Software Version	-	-	-	-	-
C2SU	40	Card 2 Software Version	-	-	-	-	-
Cd1	61	Command channel 1		tEr LOC LCC Mdb	Terminals Local Remote display Modbus		
CFG	46	Macro-configuration	-	-	-	-	-
CHCF	60	Channel configuration		SIM SEP	Simultaneous mode Separate mode	SIM	
CLI	74	Current limitation	A	0.25 to 1.5	-	1.5 A	

Code	Page	Name	Unit	Possible value / Function		Factory setting	User setting
CL2	74	Current limitation 2	A	0.25 to 1.5	-	1.5 A	
COd	42	HMI Password	-	OFF On	Code disabled Code activated	OFF	
CON1	41	Modbus communication status	-	rOt0 rOt1 rIt0 rIt1	-	-	
COS	55	Rated motor cos phi	-	0.5 to 1	-	according to drive rating	
CrH1	51	AI1 current scaling parameter of 100%	mA	0 to 20	-	20 mA	
CrL1	51	AI1 current scaling parameter of 0%	mA	0 to 20	-	4 mA	
Ctd	53	Motor current threshold	In	0 to 1.5	-	InV	
Ctt	55	Motor control type	-	Std PErF PUMP	Standard Performance Pump	Std	
dCF	64	Ramp divider		1 to 10	-	4	
dE2	63	Deceleration 2	s	0.0 to 999.9	-	5 s	
dEC	44 62	Deceleration	s	0.0 to 999.9	-	3.0 s	
dP1	41	Last detected fault 1	-	see page 93		-	-
dP2	41	Last detected fault 2	-	see page 93		-	-
dP3	42	Last detected fault 3	-	see page 93		-	-
dP4	42	Last detected fault 4	-	see page 93		-	-
drn	82	Degraded line supply operation		nO YES	No Yes	nO	
EP1	41	State of drive at detected fault 1	-	-	-	-	-
EP2	42	State of drive at detected fault 2	-	-	-	-	-
EP3	42	State of drive at detected fault 3	-	-	-	-	-
EP4	42	State of drive at detected fault 4	-	-	-	-	-
FbS	70	PID feedback scale factor	PID	0.1 to 100.0	-	1.0	
FCS	45	Factory / recall customer parameter set	-	nO rEC In In1	No REC IN INI	nO	
FLG	56	Frequency loop gain	%	0 to 100	-	20%	
FLO	61	Forced local assignment		nO L1H L2H L3H L4H	No L1h L2h L3h L4h	nO	

Code	Page	Name	Unit	Possible value / Function		Factory setting	User setting
FLOC	61	Forced local reference		nO AI1 LCC AIU1	No Terminal HMI Jog dial	nO	
FLr	78	Catch on the fly		nO YES	No Yes	nO	
Fr1	44 60	Reference channel 1		AI1 LCC Mdb AIU1	Terminal HMI Modbus Jog dial	AI1	
FrH	36	Speed reference		AI1 LCC Mdb AIU	Terminal HMI Modbus Jog dial		
FrS	55	Rated motor frequency	Hz	10 to 400	-	50 or 60 Hz (to bFr)	
FSt	64	Fast stop assignment		nO L1L L2L L3L L4L	No L1L: LI1 active low L2L: LI2 active low L3L: LI3 active low L4L: LI4 active low	nO	
Ftd	53	Motor frequency threshold	Hz	0 to 400	-	50 or 60 Hz	
FtH	41	Fan time display		0.01 to 999	-	-	-
HSP	44 76	High speed	Hz	LSP to tFr	-	50 or 60 Hz	
HSP2	76	High speed 2	Hz	LSP to tFr	-	50 or 60 Hz according to BFr, max TFr	
HSP3	76	High speed 3	Hz	as HSP2	as HS2	as HSP2	
HSP4	76	High speed 4	Hz	as HSP2	as HS2	as HSP2	
HSU	40	Display of high speed value	-	-	-	-	-
InH	81	Detected fault inhibition assignment		nO L1H L2H L3H L4H	Non active L1h: LI1 active high L2h: LI2 active high L3h: LI3 active high L4h: LI4 active high	nO	
IPL	80	Input Phase loss	-	nO YES	No Yes	YES	
Ith	80	Motor thermal current	A	0.2 to 1.5	-	according to drive rating	
JOG	66	Jog assignment		nO L1H L2H L3H L4H	No L1h: LI1 active high L2h: LI2 active high L3h: LI2 active high L4h: LI4 active high	nO	
JPF	68	Skip frequency	Hz	0 to 400	-	0 Hz	

Code	Page	Name	Unit	Possible value / Function		Factory setting	User setting
LC2	74	2nd current limitation commutation		nO L1H L2H L3H L4H L1L L2L L3L L4L	No L1h: LI1 active high L2h: LI2 active high L3h: LI3 active high L4h: LI4 active high L1L: LI1 active low L2L: LI2 active low L3L: LI3 active low L4L: LI4 active low	nO	
LCr	38	Motor current	A	-	-	-	-
LFL1	81	4-20 mA loss behaviour		nO YES	No Yes	nO	
LFr	38 44 60	External reference value	-	-400 to 400	-	0	
LIS1	40	State of logic inputs LI1 to LI4	-	-	-	-	-
LOC	52	Application Overload threshold	% of In	70 to 150	-	90 %	
LO1	52	LO1 assignment		as r1	as r1	nO	
LOIS	52	LO1 status (output active level)		POS nEG	Positive Negative	POS	
LOS1	40	State of the logic output LO1 and relay R1	-	-	-	-	-
LSP	44 75	Low speed	Hz	0 to HSP	-	0 Hz	
LUL	53	Application Underload threshold	% of In	20 to 100	-	60 %	
MPC	58	Motor parameter choice	-	nPr COS	nPr COS	nPr	
MtM	80	Motor thermal state memo	-	nO YES	No Yes	nO	
nC1	84	Com scanner write address value 1					
nC2	84	Com scanner write address value 2					
nC3	84	Com scanner write address value 3					
nC4	84	Com scanner write address value 4					
nCA1	83	Com scanner write address parameter 1				2135	
nCA2	83	Com scanner write address parameter 2				219C	
nCA3	83	Com scanner write address parameter 3				0	
nCA4	83	Com scanner write address parameter 4					

Code	Page	Name	Unit	Possible value / Function		Factory setting	User setting
nCr	55	Rated motor current	A (1)	0.25 to 1.5	-	according to drive rating	
nCU	40	Drive Power rating					
nM1	84	Com scanner read address value 1					
nM2	84	Com scanner read address value 2					
nM3	84	Com scanner read address value 3					
nM4	84	Com scanner read address value 4					
nMA1	83	Com scanner read address parameter 1	-			0C81	
nMA2	83	Com scanner read address parameter 2	-			219C	
nMA3	83	Com scanner read address parameter 3	-			0	
nMA4	83	Com scanner read address parameter 4	-			0	
nPL	50	Logic inputs type	-	POS nEG	Positive Negative	POS	
nPr	45 55	Rated Motor Power	kW or HP	-	-	according to drive rating	
nrd	57	Motor noise reduction		nO YES	No Yes	nO	
nSP	55	Rated motor speed	rpm	0 to 32767	-	according to drive rating	
nSt	64	Freewheel stop assignment		nO L1L L2L L3L L4L	No L1L: LI1 active low L2L: LI2 active low L3L: LI3 active low L4L: LI4 active low	nO	
OLL	80	Overload fault management	-	nO YES	No Yes	YES	
OPL	80	Output Phase loss	-	nO YES	No Yes	YES	
OPr	38	Output power	%	-	-	-	-
PAU	72	PID auto/manual assignment		nO L1H L2H L3H L4H	No L1h: LI1 active high L2h: LI2 active high L3h: LI3 active high L4h: LI4 active high	nO	
PEt	41	Process elapsed time	0.01	-	-	-	-
PFL	57	Flux Profile	%	0 to 100		20%	
PIC	72	PID correction reverse	-	nO YES	No Yes	nO	

(1) In = nominal drive current

Code	Page	Name	Unit	Possible value / Function		Factory setting	User setting
PIF	70	PID feedback assignment		nO AI1	No Terminal	nO	
PI1	70	Activation internal PID reference		nO YES	No Yes	nO	
PIN	72	PID manual reference		nO AI1 AIU	No Terminal AIV	nO	
Pr2	70	2 preset PID assignment	-	nO LIH L2H L3H L4H	No L1h L2h L3h L4h	nO	
Pr4	71	4 preset PID assignment		Pr2	as Pr2	nO	
PrP	71	PID reference ramp	s	0 to 99.9	-	0 s	
PS2	68	2 Preset speeds		nO LIH L2H L3H L4H	No L1h: LI1 active high L2h: LI2 active high L3h: LI2 active high L4h: LI4 active high	nO	
PS4	68	4 Preset speeds		PS2	as PS2	nO	
PS8	68	8 Preset speeds		PS2	as PS2	nO	
PSt	60	Stop key priority		nO YES	No Yes	YES	
PtH	41	Power On time display		0.01 to 999	-	-	-
r1	51	R1 assignment	-	nO FLt rUn FtA FLA CtA SrA tSA ULA OLA AP1	Not assigned No detected error Drive run Frequency threshold reached HSP reached I threshold reached Frequency reference reached Motor thermal reached Underload alarm Overload alarm AI1 Al. 4-20	FLt	
rdG	70	PID derivative gain		0.00 to 100.00	-	0.00	
rFr	38	Output frequency	Hz	-	-	-	
rIG	70	PID integral gain		0.01 to 100	-	1	
rIn	60	Reverse inhibition		nO YES	No Yes	nO	

Code	Page	Name	Unit	Possible value / Function		Factory setting	User setting
rP2	71	2 preset PID reference	%	0 to 100	-	25%	
rP3	71	3 preset PID reference	%	0 to 100	-	50%	
rP4	71	4 preset PID reference	%	0 to 100	-	75%	
rPC	38	PID reference	-	-	-	-	-
rPE	38	PID error	-	-	-	-	-
rPF	38	PID Feedback	-	-	-	-	-
rPG	70	PID proportional gain		0.01 to 100	-	1	
rPH	71	PID max value reference	% PID	0 to 100	-	100%	
rPI	71	Internal PID reference	% PID	0 to 100	-	0%	
rPL	71	PID min value reference	% PID	0 to 100	-	0%	
rPr	82	Reset power run		nO FtH	Function inactive Reset fan time display	nO	
rPS	62	Ramp switching commutation		nO L1H L2H L3H L4H L1L L2L L3L L4L	No L1h: LI1 active high L2h: LI2 active high L3h: LI3 active high L4h: LI4 active high L1L: LI1 active low L2L: LI2 active low L3L: LI3 active low L4L: LI4 active low	nO	
rPt	62	Ramp shape assignment		LIn S U	Linear S shape U shape	LIn	
rrS	64	Reverse direction	-	nO L1h L2H L3H L4H	Function inactive L1h active high L2h active high L3h active high L4h active high	nO	
rSF	77	Detected fault reset assignment	-	nO L1H L2H L3H L4H	No L1h: LI1 active high L2h: LI2 active high L3h: LI3 active high L4h: LI4 active high	nO	
rSL	73	PID wake up level	%	0 to 100	-	0%	
rtH1	41	Run elapsed time display	0.01h	0.01 to 999	-	-	-
SCS	45	Store customer parameter set	-	nO Str1	No Yes	nO	
SdC1	65	Automatic DC injection current	A	0 to 1.2		0.7 A	
SFr	57	Switching frequency	kHz	2 to 16	-	12	
SFS	71	PID predictive speed	-	nO to 400	-	nO	
SFt	57	Switching frequency type	-	HF1 HF2	HF1 HF2	HF1	

Code	Page	Name	Unit	Possible value / Function		Factory setting	User setting
SH2	76	2 HSP assignment	-	nO L1H L2H L3H L4H	No L1h: LI1 active high L2h: LI2 active high L3h: LI3 active high L4h: LI4 active high	nO	
SH4	76	4 HSP assignment	-	as SH2	as SH2	nO	
SLL	82	Modbus fault management		nO YES	No Yes	YES	
SLP	56	Slip compensation	% of nSL	0 to 150	-	100%	
SP2	68	Preset speed 2	-	-	-	-	-
SP3	68	Preset speed 3	-	-	-	-	-
SP4	68	Preset speed 4	-	-	-	-	-
SP5	68	Preset speed 5	Hz	0 to 400	-	25 Hz	
SP6	68	Preset speed 6	Hz	0 to 400	-	30 Hz	
SP7	68	Preset speed 7	Hz	0 to 400	-	35 Hz	
SP8	68	Preset speed 8	Hz	0 to 400	-	40 Hz	
SPn	40	Specific Product Number	-	-	-	-	-
StA	56	Frequency loop stability	%	0 to 100	-	20%	
StAt	39	Product status	-	-	-	-	-
StN	81	Undervoltage ramp deceleration time	s	0.0 to 10.0	-	1.0 s	
StP	81	Undervoltage prevention	-	nO rMP	No Ramp stop	nO	
Strt	81	IGBT test		nO YES	No Yes	nO	
Stt	64	Type of stop		rMP FSt nSt	Ramp stop Fast stop Freewheel	rMP	
tAr	77	Max. automatic restart time		5 10 30 1H 2H 3H Ct	5 min 10 min 30 min 1 h 2 h 3 h Infinite	5 min	
tbr	83	Modbus baud rate		4.8 9.6 19.2 38.4	4.8 kbps 9.6 kbps 19.2 kbps 38.4 kbps	19.2 kbps	
tCC	47	Type of control	-	2C 3C	2 wire control 3 wire control	2C	
tCt	50	2 wire type control	-	LEL trn PFO	Level Transition Priority FW	trn	

Code	Page	Name	Unit	Possible value / Function		Factory setting	User setting
tdC1	65	Automatic DC injection time	s	0.1 to 30		0.5 s	
tFO	83	Modbus format	-	8o1 8E1 8n1 8n2	8o1 8E1 8n1 8n2	8E1	
tFr	55	Maximum frequency	Hz	10 to 400		60 or 72 Hz (to bFr)	
tHd	38	Drive thermal state	-	-	-	-	-
tHr	38	Motor thermal state	%	-	-	-	-
tHt	80	Motor protection type	-	ACL FCL	Self-ventilated Moto-ventilated	ACL	
tLS	72 75	Low speed operating time	s	0.1 to 999.9	-	nO	
tOL	52	Application Overload time delay	s	0 to 100	-	5 s	
ttd	53	Motor thermal state threshold	% of tHr	0 to 118		100%	
ttO	83	Modbus time out	-	0.1 to 30	-	10	
tUn	58	Auto-tuning	-	nO YES dOnE	No Yes Done	nO	
UFr	56	IR compensation (law U/F)	%	25 to 200	-	100%	
ULn	38	Main voltage	V	-	-	-	-
ULt	53	Application underload time delay	s	0 to 100	-	5 s	
UnS	55	Rated motor voltage	V	100 to 480	-	230 V	
UPP	73	Wake-up threshold	%	0 to 100	-	0	
USb	81	Undervoltage fault management	-	0 1	Detected fault + R1 open Detected fault + R1 closed	0	
UCAL	40	Drive voltage rating	-	-	-	-	-

BBV28581

ATV12_User_manual_v1

04/2009